Radial, Angular, and 4-point Contact

Thin Section Ball Bearings

Precision-engineered solutions for aerospace, semiconductor, and custom machinery applications.

ITM UNITEC GmbH
Kuchengrund 19
71522 Backnang

Tel.: +49 7191 495 265-0
Fax: +49 7191 495 265-10

info@itm-unitec.com
www.itm-unitec.com

RBC Bearings has had a long tradition of innovation, commitment, and quality since the company was founded in 1919. Today, RBC Bearings has grown into a world-class manufacturer of standard and custom-engineered bearings and related products, with a product focus on research, testing, and development of the best product for specific applications.

What We Manufacture

RBC Bearings, with facilities throughout North America and Europe, provides bearings and precision products for applications in the construction, mining, material handling, transportation and off-highway equipment, robotics and automation, farming, machine tool, and semiconductor equipment industries. Through RBC Aerospace Bearings, the company is a major manufacturer of highly-engineered bearings and precision products for military, defense, and commercial aerospace applications.

RBC's high-quality bearings include:

- **Heavy Duty Needle Roller Bearings:** Pitchlign® caged heavy duty needle roller bearings, inner rings, type TJ TandemRoller® bearings for long life.
- **Spherical Plain Bearings:** Radial, angular, contact, high misalignment, extended inner ring, DuraLube™ maintenance-free spherical plain bearings, QuadLube® long life bearings, ImpactTuff® case carburized bearings, ShimPack® double-acting angular contact bearings, and CrossLube® lubrication groove systems.
- **Cam Followers and Yoke Rollers:** Standard stud, heavy stud, yoke type, caged roller followers, RBC Roller® long life cam followers, HexLube® universal cam followers, airframe track rollers. Mastguide rollers and carriage rollers, chain sheaves (for leaf chain), toothless sprockets (for roller chain), and heavy-duty roller bearing construction.
- **Rod Ends:** Commercial and aerospace, precision, Mil-Spec series, self-lubricating, inch and metric. Heim®, Unibal®, and Spherco™ brands.
- **Self-Lubricating Bearings:** Radial, thrust, rod ends, spherical plain bearings, high temperature, high loads, inch and metric. Fiberglide® brand.
- **Thin Section Ball Bearings:** Standard cross sections to one inch. Sizes to 40 inches. Stainless steel and other materials available. Seals available on all sizes and standard cross sections.
- **Airframe Control Bearings:** Ball bearing types, self-lubricating types, needle roller track rollers.
- **Ground, Semiground, and Unground Ball Bearings:** Full complement, utilizes design and burnished races for higher loads, long life, and smooth operation.
- **Dowel Pins, Loose Needle Rollers, Shafts**
- **Tapered Roller and Tapered Thrust Bearings:** Case-hardened and through-hardened in a variety of sizes, used in Class 8 heavy truck and trailer wheel bearings, final drive transmissions and gearboxes.
- **Custom Designed Bearings:** RBC produces a wide range of custom bearings in various materials for specific applications.

RBC Thin Section Ball Bearings

RBC thin section ball bearings are engineered to solve a variety of design problems that cannot be solved with conventional ball bearings.

A bearing is considered a thin section when the bore diameter is greater than four times the radial cross section. Within any thin section ball bearing series, the cross section remains constant as the bore diameter changes. Typically the cross section is twice the ball diameter, and nominal dimensions are given in inches.

Some advantages of RBC thin section ball bearings are:

- **Light weight**
- **High stiffness**
- **Small cross section**
- **Multi-load capabilities**
- **Variety of cross sections & sizes**
- **Modified & custom bearings**

RBC thin section ball bearings are most often found where space limitations, combined loading, and weight restrictions pose unique design requirements.

RBC also designs and manufactures special thin section ball bearings tailored for specific applications.

How We Can Serve You

RBC has implemented a total quality control system that uses statistical quality control at all facilities, and manufactures in high volume to a just-in-time program.

To serve the ongoing needs of customers, RBC has a network of over 1,600 distributors and sales engineers throughout the US, Europe and South America, with authorized agents worldwide. For assistance with your bearing application, contact:

Customer Service: 800.390.3300

Warranty

RBC products are warranted for material and workmanship for a period not to exceed 90 days from shipment and for a value not to exceed purchase price. No other warranty is in effect.

Disclaimer and Intellectual Property Statement

The materials comprising this Catalog are provided by RBC Bearings Incorporated ("RBC Bearings, RBC") as a service to its customers on an "as-is" basis for informational purposes only. RBC assumes no responsibility for any errors or omissions in these materials. RBC makes no commitment to update the information contained herein.

RBC makes no, and expressly disclaims any, representations or warranties, express or implied, regarding the Catalog, including, without limitation, any implied warranties of merchantability or fitness for a particular purpose. RBC makes no, and expressly disclaims any, warranties, express or implied, regarding the correctness, accuracy, completeness, timeliness, and reliability of the text, graphics and any other items in the Catalog. Under no circumstances shall RBC, its affiliates, or any of its respective partners, officers, directors, employees, agents or representatives be liable for any damages, whether direct, indirect, special or consequential damages for lost revenues, lost profits, or otherwise, arising from or in connection with this Catalog and the materials contained herein.

All materials contained in the Catalog are protected by copyright laws, and may not be reproduced, republished, distributed, transmitted, displayed, broadcast or otherwise exploited in any manner without the express prior written permission of RBC.

RBC's names and logos and all related trademarks (including RBC Part Numbers, Series Numbers, and Cone and Cup Numbers), tradenames, and other intellectual property are the property of RBC Bearings and cannot be used without its express prior written permission.

TABLE OF CONTENTS

Part Number Designation	4-5
Selection Guide	5
Separator Selection Guide	6
Elastomer Molded Seals vs. Combination Seals	7
Bearing Material Comparison	8
K-Series 52100 Steel	10–27
J-Series Elastomer Molded Sealed Bearings	28–47
G-Series PTFE/300SS Sealed Bearings	48–63
N-Series Thin Dense Chrome Coated	64–81
S-Series 440C Stainless Steel	82–99
Simplex™ Series	100-101
Y-PWI Series	102
Thermal-Comp™	103
Tolerance Tables	104–109
Engineering Data	110–117
Typical and Custom Applications	118–132
Availability Chart	133
Notes	134
Data Fax	135

CROSS SECTIONS OF RBC THIN SECTION BALL BEARINGS

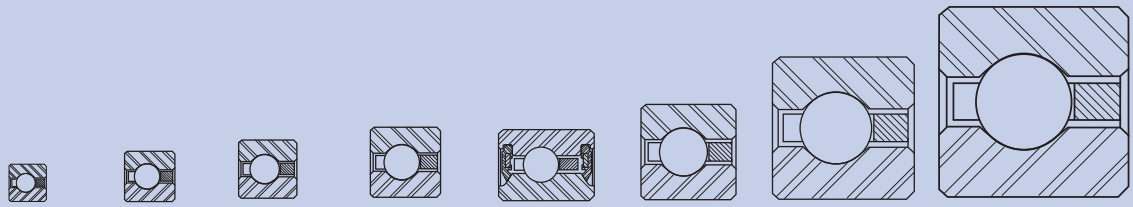

Cross Section:	3/16"	1/4"	5/16"	3/8"	3/8"	1/2"	3/4"	1"
Series:	KAA	KA	KB	KC	JU	KD	KF	KG
Bore Size: Inches	1.0 - 1.75	2.0 - 12.0	2.0 - 20.0	4.0 - 30.0	4.0 - 12.0	4.0 - 30.0	4.0 - 40.0	4.0 - 40.0
Bore Size: mm	25.4 -44.45	50.8 - 304.8	50.8 - 508	101.6 - 762	101.6 - 304.8	101.6 - 762	101.6 - 1016	101.6 - 1016

RBC THIN SECTION BALL BEARINGS
PART NUMBER DESIGNATION

EXAMPLE	K	A	1	2	0	X	P	0	M*	RBC
NOMENCLATURE	Material	Series	Size			Type	Separator	Precision	Radial Play	
POSITION	1	2	3	4	5	6	7	8	9**	

POSITION 1: Material (& seal/shield options)

	Material: Rings	Material: Balls	Seals, Shields	Coating
A	52100		1 seal - PTFE	No
B	52100		2 seals - PTFE	No
D	52100		1 shield	No
E	52100		2 shields	No
F	52100		1 combo - PTFE seal & shield	No
G	52100		2 combo - PTFE seal & shield	No
H	52100		1 seal - molded rubber	No
J	52100		2 seals - molded rubber	No
K	52100		No seals or shields	No
L	52100	440C	2 combo - PTFE seal & shield	Thin Dense Chrome
M	M-50		No seals or shields	No
N	52100	440C	No seals or shields	Thin Dense Chrome
P	17-4 PH	Ceramic	No seals or shields	No
Q	52100		No seals or shields	No
R	52100	440C	No seals or shields	Zn Nickel plating
S	440C		No seals or shields	No
T	440C		1 seal - PTFE	No
U	440C		2 combo - PTFE seal & shield	No
V	440C		2 shields	No
W	440C		2 seals - molded rubber	No
X	52100	Ceramic	No seals or shields	No
Y	440C	Ceramic	Ceramic balls	No
Z	OTHER			

POSITION 6: Type

SEE PAGE 5

POSITION 7: Ball Separators

SEE PAGE 6

POSITION 8: RBC Precision Class

CLASS	DESCRIPTION
0	ABEC 1F
3	ABEC 3F
4	ABEC 5F
6	ABEC 7F
	REFERENCE: ANSI/ABMA STD 26.2

POSITION 2: Series (Note: Recommended Seal and Shielded Bearings)

BEARING CROSS SECTION

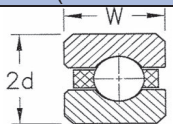

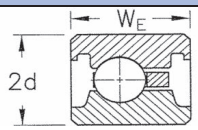

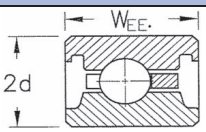

BALL DIA (d)	STANDARD WIDTH	W (=2d)	EXTENDED WIDTH	W_E (>2d)	EXTRA EXTENDED WIDTH	W_{EE} (>2d)
3/32	AA	.1875	HA	.2500	SA	.3125
1/8	A	.2500	H	.3125	S	.3750
5/32	B	.3125	I	.3750	T	.4375
3/16	C	.3750	J	.4375	U	.5000
1/4	D	.5000	K	.5781	V	.6563
3/8	F	.7500	M	.8750	X	1.0000
1/2	G	1.0000	N	1.1875	Y	1.3750

POSITION 3, 4, 5: Size

B

BORE SIZE (INCHES) MULTIPLIED BY 10

EXAMPLES:
030 = 3.00" BORE
075 = 7.50" BORE
250 = 25.00" BORE

POSITION 9: Bearing Assembly Clearance or Tightness

	DIAMETRAL CLEARANCE (POSITIVE RADIAL PLAY)		RADIAL PRELOAD TIGHTNESS (NEGATIVE RADIAL PLAY)		AXIAL PRELOAD GAP (DUPLEX BRG)
A	+.0000 TO +.0005	K	-.0000 TO -.0005	K	+.0000 TO +.0005
B	+.0000 TO +.0010	L	-.0000 TO -.0010	L	+.0000 TO +.0010
C	+.0005 TO +.0010	M	-.0005 TO -.0010	M	+.0005 TO +.0010
D	+.0005 TO +.0015	N	-.0005 TO -.0015	N	+.0005 TO +.0015
E	+.0010 TO +.0020	P	-.0010 TO -.0020	P	+.0010 TO +.0020
F	+.0015 TO +.0025	R	-.0015 TO -.0025	R	+.0015 TO +.0025
G	+.0020 TO +.0030	S	-.0020 TO -.0030	S	+.0020 TO +.0030
H	+.0030 TO +.0040	T	-.0030 TO -.0040	T	+.0030 TO +.0040
I	+.0040 TO +.0050	U	-.0040 TO -.0050	U	+.0040 TO +.0050
J	+.0050 TO +.0060	Z	PER VARIATION LOG	Z	PER VARIATION LOG
O	MATCH FOR NORMAL RADIAL PLAY				

RBC THIN SECTION BALL BEARING SELECTION

POSITION 6 TYPE						
		LOAD CONDITION				
Bearing Type	Ball Contact	Radial	Axial	Moment	Reversing Axial	Combined Radial, Axial & Moment
C	Radial	Good	Fair	Poor	Fair	Poor
A	Angular	Good	Very Good	Do not use	Do not use	Do not use
X	4-Point	Fair	Good	Good	Good	Fair
B	Double Angular	Very Good	Very Good	Very Good	Very Good	Good
F	Double Angular	Very Good	Very Good	Very Good	Very Good	Good
T	Double Angular	Very Good	Excellent	Do not use	Do not use	Do not use
M	Double Angular	Excellent	Excellent	Excellent	Excellent	Excellent
W	Double Angular	Excellent	Excellent	Excellent	Excellent	Excellent

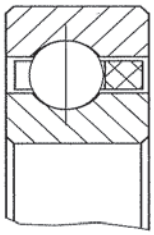

C–TYPE
(RADIAL CONTACT)

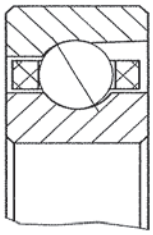

A–TYPE
(ANGULAR CONTACT)

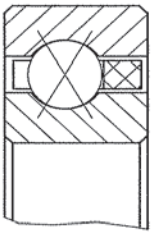

X–TYPE
(4–POINT CONTACT)

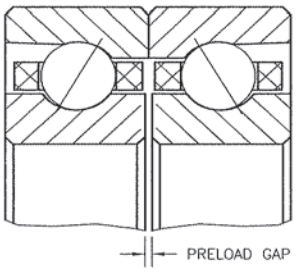

B–TYPE
DUPLEX BACK–TO–BACK (DB)

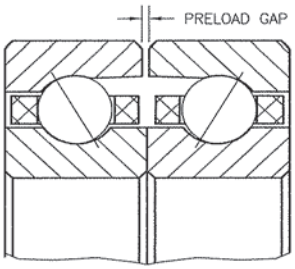

F–TYPE
DUPLEX FACE–TO–FACE (DF)

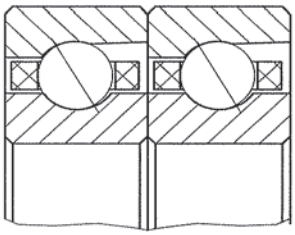

T–TYPE
DUPLEX TANDEM (DT)

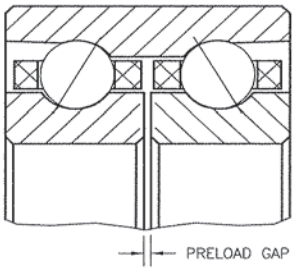

M–TYPE
SUPERDUPLEX™ BACK–TO–BACK

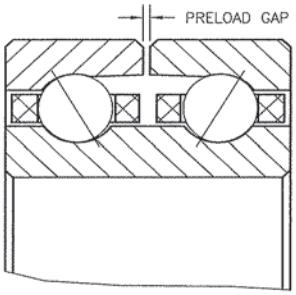

W–TYPE
SUPERDUPLEX™ FACE–TO–FACE

For more information visit our web site at rbcbearings.com

RBC THIN SECTION BALL BEARING SELECTION

POSTION 7: Separators

BRG TYPE

CLOSED RING

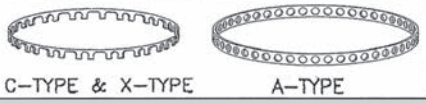

ONE STRIP OR SEGMENTS

CAGE DESIGN FEATURES

	SHAPE	FABRICATION METHOD	POCKET RETENTION	ADVANTAGE LIMITATIONS	MATL/TYPE CODE
C- TYPE & X- TYPE	ONE STRIP or SEGMENTS	MOLDED		Higher ball count. Available for all diameters over 4". Recommended for operating temperature range: -40° to 210°F	**N** Nylon P12
					C Composite
	CLOSED RING	MACHINED		Low torque and light weight applications. Can be oil impregnated as required. Not recommended for high speed or high temperatures.	**D** Phenolic
		MOLDED		Low torque and light weight applications. High speed limits. Not recommended for temperatures outside -65° to 250°F range.	**L** GFR Nylon
				Exellent for applications in a vacuum environment. Limited availability	**Q** PEEK
	SEGMENTS	STAMPED, FORMED and BRAZED		Ideal for commercial applications with moderate torque and speed requirements. Not recommended for low torque applications	**E** Brass
	CLOSED RING			Ideal for commercial applications with moderate torque and speed requirements. Not recommended for low torque applications	**P** Brass or (Composite) *
				High strength, improved corrosion resistance. High temparature capabilities. Not recommended for low torque applications	**U** CRES
		ONE-PIECE DIE-FORMED		Ideal for applications with moderate torque and high speed. Limited availability	**V** Brass
	1 STRIP or SEGMENTS	FORMED WIRE	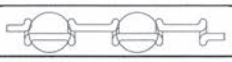	High torque, low speed, and light weight applications. Not intended for use in high speed applications	**W** Spring Steel or CRES
A- TYPE	ONE STRIP or SEGMENTS	MOLDED	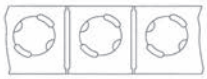	Higher ball count. Available for all diameters over 4". Recommended for operating temperature range: -40° to 210°F	**J** Nylon P12
				Higher ball count. Available for all diameters over 4". Recommended for operating temperature range: -40° to 210°F	**C** Composite
	CLOSED RING	MACHINED		Low torque and light weight applications. Can be oil impregnated as required. Not recommended for temperatures above 250°F	**H** Phenolic
		MOLDED		Low torque and light weight applications. High speed limits. Not recommended for temperatures outside of -65° to 250°F range.	**G** GFR Nylon
				Exellent for applications in a vacuum environment. Limited availability	**Q** Peek
	SEGMENTS	STAMPED, FORMED and BRAZED		Ideal for commercial applications with moderate torque and speed requirements. Not recommended for low torque applications	**E** Brass
	CLOSED RING			Ideal for commercial applications with moderate torque and speed requirements. Not recommended for low torque applications	**R** Brass or (Composite) *
				High strength, improved corrosion resistance. High temparature capabilities. Not recommended for low torque applications	**U** CRES
		ONE-PIECE DIE-FORMED		Ideal for applications with moderate torque and high speed. Limited availability	**V** Brass
	1 STRIP or SEGMENTS	FORMED WIRE		High torque, low speed, and light weight applications. Not intended for use in high speed applications	**M** Spring Steel or CRES
A- TYPE, C-TYPE or X-TYPE	PER PIECE	SLUGS; MOLD or MACHINED TUBES		Low torque applications, higher capacity than standard bearing. Not intended for use in high speed applications. Material may have temperature limitations.	**S** PTFE/PFA
					K PEEK
		SPACER BALLS		High temperature applications, offers higher resistance to wear. Lower load capacity in A-type bearings	**Z** Various
		TOROIDS		Low torque applications, higher capacity than standard bearing. Not intended for use in high speed applications. Material may have temperature limitations.	**T** PTFE/PFA
	N/A	FULL COMP		Highest loading capacity and maximum stiffness. Higher torque and lower speedlimits. Not recommended for low torque and/or high speed.	**F** N/A

* ITB DOES NOT SUPPLY "ONE-PIECE" CLOSED MOLDED (P & R) CAGES. WE SELL STRIP N-CAGES AS P-CAGES, AND J-CAGES AS R-CAGES.

ELASTOMER MOLDED SEALS VS. COMBINATION SEALS

Typical Elastomer Molded Design

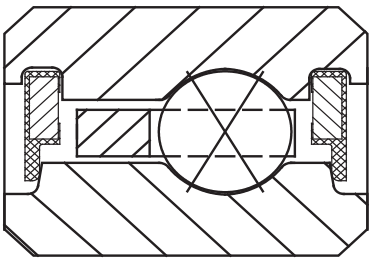

Typical PTFE/300SS Design

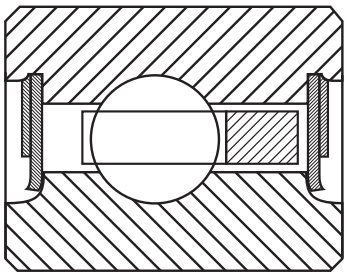

Separable Shields

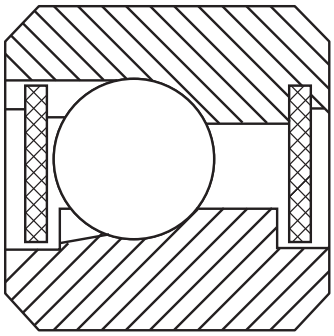

Many molded seals used in bearings are made out of nitrile (molded rubber per MIL-R-6855). The material has a relatively high coefficient of friction. In order to meet low torque bearing requirements, seal fit-up during installation must be adjusted to minimize contact pressure on the sealing surfaces - reducing torque by reducing sealing effectiveness. The inherent variability in the seal molding process can further aggravate these issues. Over time, torque fluctuations are nearly inevitable sInce seals may reset or the amount of lube between the seal and the sealing surface may change. Based on these performance characteristics, molded seals are often marginal and unreliable solutions for torque sensitive applications.

RBC's solution is a combination seal-shield design. The seal is made from either pure PTFE (Teflon®) or glass fiber reinforced PTFE (Armalon®). PTFE is chemically inert, has a very low coefficient of friction (inherent lubricity), and provides the widest operating temperature range of any sealing material. The seal is held in place and shielded with a stainless steel (300 series) flat ring. The seal drag torque in this design is minimal, predictable, and consistent over time. RBC invariably recommends this design for all low torque or torque sensitive applications that require sealing. RBC can readily retrofit problematic molded seal designs with a PTFE/300SS optImized solution. For versions that cannot allow a seal, we offer a shield in its place.

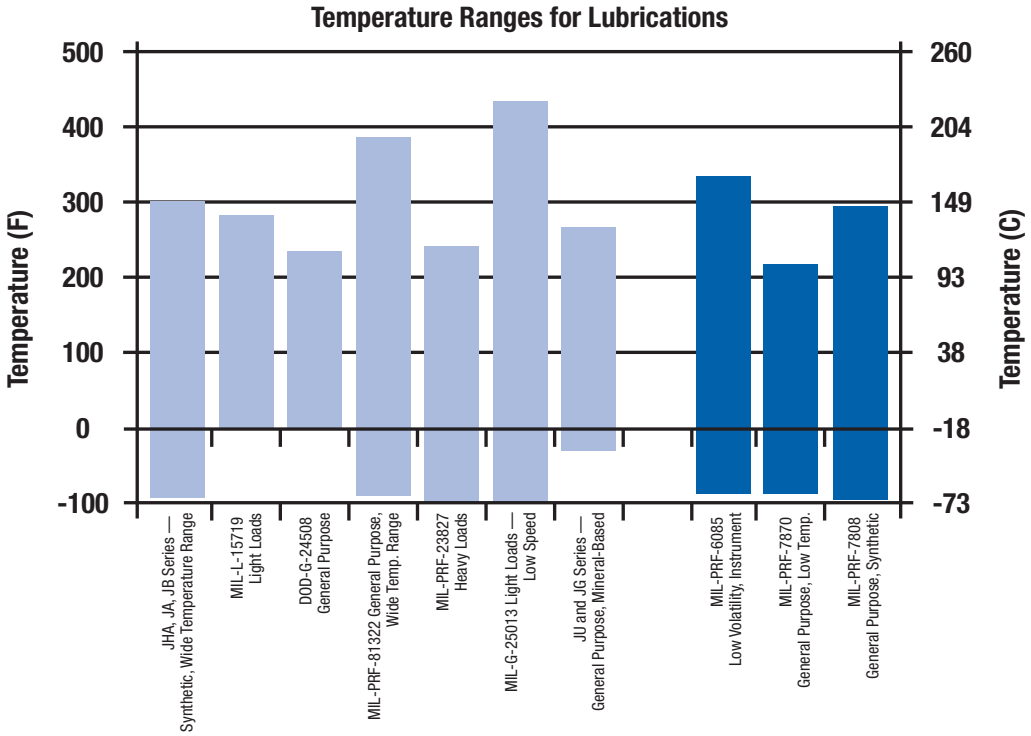

Teflon® is a registered trademark of DuPont.
Armalon® is a registered trademark of INDACO.

BEARING MATERIAL COMPARISON					
		K	N	P	S
Material Type	Rings	52100	52100 + TDC	17-4 PH	440C
	Balls		440C	Si3N4	
Typical Hardness		HRc 58 - 66	HRc 70 - 72	H900	HRc 58 - 64
Corrosion Resistance Material		Poor	Good	Very Good	Good
Fatique Resistance		Good	Good	Poor	Good
Fretting Resistance		Good	Very Good	Poor	Very Good
Perservative		Yes	May be supplied with or without preservative		

SEE FOLLOWING PAGES FOR PART NO. LISTINGS

RADIAL CONTACT, C-TYPE

THIN SECTION BALL BEARINGS

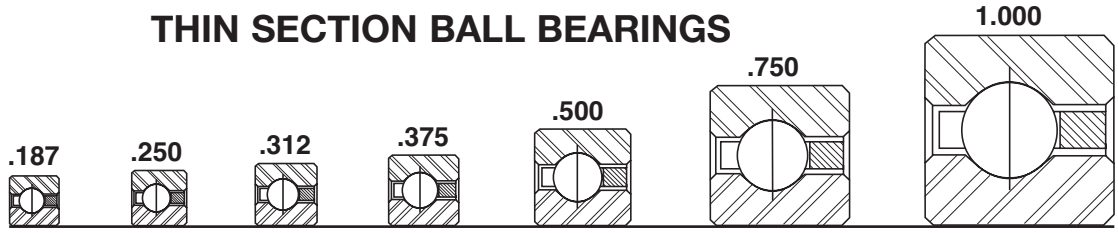

Series:	KAA	KA	KB	KC	KD	KF	KG
Cross Section Size:	3/16"	1/4"	5/16"	3/8"	1/2"	3/4"	1"

PART NUMBER*	NOMINAL DIMENSIONS												
	B Bore		D Outside Diameter		W Width		Land Diameter L_i -Inner Ring		Land Diameter L_o -Outer Ring		f_1 Housing Fillet		Ball Diameter
	in.	mm	in.	mm	in.	mm	in.	mm	in.	mm	in.	mm	in.
KAA10CL0*RBC	1.0000	25.400	1.3750	34.925	0.1875	4.763	1.141	28.98	1.234	31.34	0.015	0.38	3/32
KAA15CL0*RBC	1.5000	38.100	1.8750	47.625	0.1875	4.763	1.641	41.68	1.734	44.04	0.015	0.38	3/32
KAA17CL0*RBC	1.7500	44.450	2.1250	53.975	0.1875	4.763	1.890	48.00	1.985	50.42	0.015	0.38	3/32
KA020CP0*RBC	2.0000	50.800	2.5000	63.500	0.2500	6.350	2.188	55.58	2.313	58.75	0.025	0.64	1/8
KB020CP0*RBC	2.0000	50.800	2.6250	66.675	0.3125	7.938	2.234	56.74	2.391	60.73	0.032	0.81	5/32
KA025CP0*RBC	2.5000	63.500	3.0000	76.200	0.2500	6.350	2.688	68.28	2.813	71.45	0.025	0.64	1/8
KB025CP0*RBC	2.5000	63.500	3.1250	79.375	0.3125	7.938	2.734	69.44	2.891	73.43	0.032	0.81	5/32
KA030CP0*RBC	3.0000	76.200	3.5000	88.900	0.2500	6.350	3.188	80.98	3.313	84.15	0.025	0.64	1/8
KB030CP0*RBC	3.0000	76.200	3.6250	92.075	0.3125	7.938	3.234	82.14	3.391	86.13	0.032	0.81	5/32
KA035CP0*RBC	3.5000	88.900	4.0000	101.600	0.2500	6.350	3.688	93.68	3.813	96.85	0.025	0.64	1/8
KB035CP0*RBC	3.5000	88.900	4.1250	104.775	0.3125	7.938	3.734	94.84	3.897	98.98	0.032	0.81	5/32
KA040CP0*RBC	4.0000	101.600	4.5000	114.300	0.2500	6.350	4.188	106.38	4.313	109.55	0.025	0.64	1/8
KB040CP0*RBC	4.0000	101.600	4.6250	117.475	0.3125	7.938	4.234	107.54	4.391	111.53	0.032	0.81	5/32
KC040CP0*RBC	4.0000	101.600	4.7500	120.650	0.3750	9.525	4.281	108.74	4.469	113.51	0.040	1.02	3/16
KD040CP0*RBC	4.0000	101.600	5.0000	127.000	0.5000	12.700	4.375	111.13	4.625	117.48	0.060	1.52	1/4
KF040CP0*RBC	4.0000	101.600	5.5000	139.700	0.7500	19.050	4.563	115.90	4.938	125.43	0.080	2.03	3/8
KG040CP0*RBC	4.0000	101.600	6.0000	152.400	1.0000	25.400	4.750	120.65	5.250	133.35	0.080	2.03	1/2
KA042CP0*RBC	4.2500	107.950	4.7500	120.650	0.2500	6.350	4.438	112.73	4.563	115.90	0.025	0.64	1/8
KB042CP0*RBC	4.2500	107.950	4.8750	123.825	0.3125	7.938	4.484	113.89	4.641	117.88	0.032	0.81	5/32
KC042CP0*RBC	4.2500	107.950	5.0000	127.000	0.3750	9.525	4.531	115.09	4.719	119.86	0.040	1.02	3/16
KD042CP0*RBC	4.2500	107.950	5.2500	133.350	0.5000	12.700	4.625	117.48	4.875	123.83	0.060	1.52	1/4
KF042CP0*RBC	4.2500	107.950	5.7500	146.050	0.7500	19.050	4.813	122.25	5.188	131.78	0.080	2.03	3/8
KG042CP0*RBC	4.2500	107.950	6.2500	158.750	1.0000	25.400	5.000	127.00	5.500	139.70	0.080	2.03	1/2
KA045CP0*RBC	4.5000	114.300	5.0000	127.000	0.2500	6.350	4.688	119.08	4.813	122.25	0.025	0.64	1/8
KB045CP0*RBC	4.5000	114.300	5.1250	130.175	0.3125	7.938	4.734	120.24	4.891	124.23	0.032	0.81	5/32
KC045CP0*RBC	4.5000	114.300	5.2500	133.350	0.3750	9.525	4.781	121.44	4.969	126.21	0.040	1.02	3/16
KD045CP0*RBC	4.5000	114.300	5.5000	139.700	0.5000	12.700	4.875	123.83	5.125	130.18	0.060	1.52	1/4
KF045CP0*RBC	4.5000	114.300	6.0000	152.400	0.7500	19.050	5.063	128.60	5.438	138.13	0.080	2.03	3/8
KG045CP0*RBC	4.5000	114.300	6.5000	165.100	1.0000	25.400	5.250	133.35	5.750	146.05	0.080	2.03	1/2
KA047CP0*RBC	4.7500	120.650	5.2500	133.350	0.2500	6.350	4.938	125.43	5.063	128.60	0.025	0.64	1/8
KB047CP0*RBC	4.7500	120.650	5.3750	136.525	0.3125	7.938	4.984	126.59	5.141	130.58	0.032	0.81	5/32
KC047CP0*RBC	4.7500	120.650	5.5000	139.700	0.3750	9.525	5.031	127.79	5.219	132.56	0.040	1.02	3/16
KD047CP0*RBC	4.7500	120.650	5.7500	146.050	0.5000	12.700	5.125	130.18	5.375	136.53	0.060	1.52	1/4
KF047CP0*RBC	4.7500	120.650	6.2500	158.750	0.7500	19.050	5.313	134.95	5.688	144.48	0.080	2.03	3/8
KG047CP0*RBC	4.7500	120.650	6.7500	171.450	1.0000	25.400	5.500	139.70	6.000	152.40	0.080	2.03	1/2
KA050CP0*RBC	5.0000	127.000	5.5000	139.700	0.2500	6.350	5.188	131.78	5.313	134.95	0.025	0.64	1/8
KB050CP0*RBC	5.0000	127.000	5.6250	142.875	0.3125	7.938	5.234	132.94	5.391	136.93	0.032	0.81	5/32
KC050CP0*RBC	5.0000	127.000	5.7500	146.050	0.3750	9.525	5.281	134.14	5.469	138.91	0.040	1.02	3/16
KD050CP0*RBC	5.0000	127.000	6.0000	152.400	0.5000	12.700	5.375	136.53	5.625	142.88	0.060	1.52	1/4
KF050CP0*RBC	5.0000	127.000	6.5000	165.100	0.7500	19.050	5.563	141.30	5.938	150.83	0.080	2.03	3/8
KG050CP0*RBC	5.0000	127.000	7.0000	177.800	1.0000	25.400	5.750	146.05	6.250	158.75	0.080	2.03	1/2
KA055CP0*RBC	5.5000	139.700	6.0000	152.400	0.2500	6.350	5.688	144.48	5.813	147.65	0.025	0.64	1/8
KB055CP0*RBC	5.5000	139.700	6.1250	155.575	0.3125	7.938	5.734	145.64	5.891	149.63	0.032	0.81	5/32
KC055CP0*RBC	5.5000	139.700	6.2500	158.750	0.3750	9.525	5.781	146.84	5.969	151.61	0.040	1.02	3/16

*The alphanumeric identification system is used under license.

- 52100 Steel
- Large Diameter
- Light Weight
- Small Cross Section
- Snap-Over Ball Separator

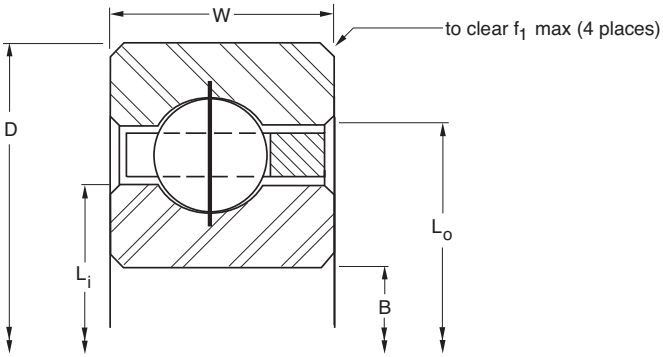

Ball Quantity	Approx. Weight		LOAD RATINGS												PART NUMBER*
			Radial				Thrust				Moment				
			Static		Dynamic		Static		Dynamic		Static		Dynamic		
	lbs.	kg	lbf	N	lbf	N	lbf	N	lbf	N	lbf - in	Nm	lbf - in	Nm	
22	0.03	0.014	290	1,290	300	1,330	N/A	N/A	N/A	N/A	N/A	N/A	N/A	N/A	KAA10CL0*RBC
30	0.04	0.018	400	1,780	350	1,560	N/A	N/A	N/A	N/A	N/A	N/A	N/A	N/A	KAA15CL0*RBC
33	0.06	0.027	460	2,050	371	1,650	N/A	N/A	N/A	N/A	N/A	N/A	N/A	N/A	KAA17CL0*RBC
27	0.10	0.045	680	3,020	560	2,490	N/A	N/A	N/A	N/A	N/A	N/A	N/A	N/A	KA020CP0*RBC
23	0.16	0.073	930	4,140	800	3,560	N/A	N/A	N/A	N/A	N/A	N/A	N/A	N/A	KB020CP0*RBC
33	0.13	0.059	830	3,690	610	2,710	N/A	N/A	N/A	N/A	N/A	N/A	N/A	N/A	KA025CP0*RBC
28	0.20	0.091	1,140	5,070	860	3,830	N/A	N/A	N/A	N/A	N/A	N/A	N/A	N/A	KB025CP0*RBC
39	0.15	0.068	990	4,400	650	2,890	N/A	N/A	N/A	N/A	N/A	N/A	N/A	N/A	KA030CP0*RBC
33	0.24	0.109	1,340	5,960	920	4,090	N/A	N/A	N/A	N/A	N/A	N/A	N/A	N/A	KB030CP0*RBC
45	0.18	0.082	1,140	5,070	690	3,070	N/A	N/A	N/A	N/A	N/A	N/A	N/A	N/A	KA035CP0*RBC
38	0.27	0.122	1,540	6,850	970	4,310	N/A	N/A	N/A	N/A	N/A	N/A	N/A	N/A	KB035CP0*RBC
51	0.19	0.086	1,290	5,740	720	3,200	N/A	N/A	N/A	N/A	N/A	N/A	N/A	N/A	KA040CP0*RBC
43	0.30	0.136	1,750	7,780	1,020	4,540	N/A	N/A	N/A	N/A	N/A	N/A	N/A	N/A	KB040CP0*RBC
35	0.45	0.204	2,100	9,340	1,290	5,740	N/A	N/A	N/A	N/A	N/A	N/A	N/A	N/A	KC040CP0*RBC
27	0.78	0.354	3,080	13,700	2,250	10,010	N/A	N/A	N/A	N/A	N/A	N/A	N/A	N/A	KD040CP0*RBC
19	1.90	0.862	5,360	23,840	3,940	17,530	N/A	N/A	N/A	N/A	N/A	N/A	N/A	N/A	KF040CP0*RBC
15	3.60	1.633	8,210	36,520	6,700	29,800	N/A	N/A	N/A	N/A	N/A	N/A	N/A	N/A	KG040CP0*RBC
54	0.20	0.091	1,370	6,090	730	3,250	N/A	N/A	N/A	N/A	N/A	N/A	N/A	N/A	KA042CP0*RBC
45	0.31	0.141	1,830	8,140	1,030	4,580	N/A	N/A	N/A	N/A	N/A	N/A	N/A	N/A	KB042CP0*RBC
37	0.47	0.213	2,220	9,880	1,320	5,870	N/A	N/A	N/A	N/A	N/A	N/A	N/A	N/A	KC042CP0*RBC
28	0.83	0.376	3,190	14,190	2,270	10,100	N/A	N/A	N/A	N/A	N/A	N/A	N/A	N/A	KD042CP0*RBC
20	2.00	0.907	5,640	25,090	4,070	18,100	N/A	N/A	N/A	N/A	N/A	N/A	N/A	N/A	KF042CP0*RBC
15	3.80	1.724	8,210	36,520	6,700	29,800	N/A	N/A	N/A	N/A	N/A	N/A	N/A	N/A	KG042CP0*RBC
57	0.22	0.100	1,440	6,410	750	3,340	N/A	N/A	N/A	N/A	N/A	N/A	N/A	N/A	KA045CP0*RBC
48	0.33	0.150	1,950	8,670	1,060	4,720	N/A	N/A	N/A	N/A	N/A	N/A	N/A	N/A	KB045CP0*RBC
39	0.48	0.218	2,340	10,410	1,350	6,010	N/A	N/A	N/A	N/A	N/A	N/A	N/A	N/A	KC045CP0*RBC
30	0.88	0.399	3,420	15,210	2,350	10,450	N/A	N/A	N/A	N/A	N/A	N/A	N/A	N/A	KD045CP0*RBC
21	2.10	0.953	5,930	26,380	4,210	18,730	N/A	N/A	N/A	N/A	N/A	N/A	N/A	N/A	KF045CP0*RBC
16	4.00	1.814	8,760	38,970	7,000	31,140	N/A	N/A	N/A	N/A	N/A	N/A	N/A	N/A	KG045CP0*RBC
60	0.23	0.104	1,520	6,760	760	3,380	N/A	N/A	N/A	N/A	N/A	N/A	N/A	N/A	KA047CP0*RBC
50	0.34	0.154	2,030	9,030	1,070	4,760	N/A	N/A	N/A	N/A	N/A	N/A	N/A	N/A	KB047CP0*RBC
41	0.50	0.227	2,460	10,940	1,370	6,090	N/A	N/A	N/A	N/A	N/A	N/A	N/A	N/A	KC047CP0*RBC
31	0.94	0.426	3,530	15,700	2,360	10,500	N/A	N/A	N/A	N/A	N/A	N/A	N/A	N/A	KD047CP0*RBC
22	2.20	0.998	6,210	27,620	4,310	19,170	N/A	N/A	N/A	N/A	N/A	N/A	N/A	N/A	KF047CP0*RBC
17	4.10	1.860	9,300	41,370	7,290	32,430	N/A	N/A	N/A	N/A	N/A	N/A	N/A	N/A	KG047CP0*RBC
63	0.24	0.109	1,590	7,070	770	3,430	N/A	N/A	N/A	N/A	N/A	N/A	N/A	N/A	KA050CP0*RBC
53	0.38	0.172	2,150	9,560	1,100	4,890	N/A	N/A	N/A	N/A	N/A	N/A	N/A	N/A	KB050CP0*RBC
43	0.58	0.263	2,590	11,520	1,390	6,180	N/A	N/A	N/A	N/A	N/A	N/A	N/A	N/A	KC050CP0*RBC
33	1.00	0.454	3,760	16,730	2,430	10,810	N/A	N/A	N/A	N/A	N/A	N/A	N/A	N/A	KD050CP0*RBC
23	2.30	1.043	6,490	28,870	4,380	19,480	N/A	N/A	N/A	N/A	N/A	N/A	N/A	N/A	KF050CP0*RBC
18	4.30	1.950	9,850	43,810	7,570	33,670	N/A	N/A	N/A	N/A	N/A	N/A	N/A	N/A	KG050CP0*RBC
69	0.25	0.113	1,750	7,780	800	3,560	N/A	N/A	N/A	N/A	N/A	N/A	N/A	N/A	KA055CP0*RBC
58	0.41	0.186	2,360	10,500	1,130	5,030	N/A	N/A	N/A	N/A	N/A	N/A	N/A	N/A	KB055CP0*RBC
47	0.59	0.268	2,830	12,590	1,440	6,410	N/A	N/A	N/A	N/A	N/A	N/A	N/A	N/A	KC055CP0*RBC

Refer to the Engineering section for load and speed limitations.

RADIAL CONTACT, C-TYPE

THIN SECTION BALL BEARINGS

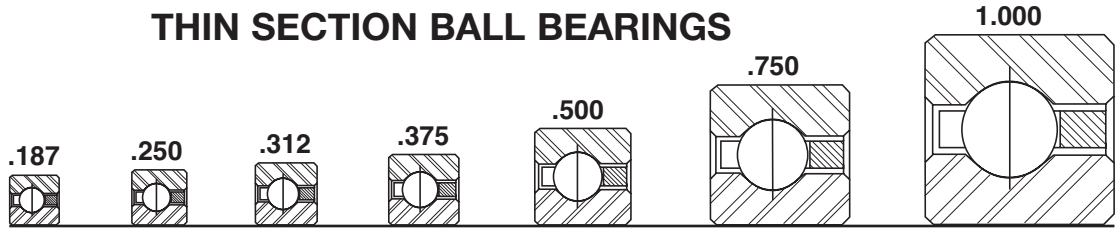

Series:	KAA	KA	KB	KC	KD	KF	KG
Cross Section Size:	3/16"	1/4"	5/16"	3/8"	1/2"	3/4"	1"

PART NUMBER*	NOMINAL DIMENSIONS												
	B Bore		D Outside Diameter		W Width		Land Diameter L_i -Inner Ring		Land Diameter L_o -Outer Ring		f_1 Housing Fillet		Ball Diameter
	in.	mm	in.	mm	in.	mm	in.	mm	in.	mm	in.	mm	in.
KD055CP0*RBC	5.5000	139.700	6.5000	165.100	0.5000	12.700	5.875	149.23	6.125	155.58	0.060	1.52	1/4
KF055CP0*RBC	5.5000	139.700	7.0000	177.800	0.7500	19.050	6.063	154.00	6.438	163.53	0.080	2.03	3/8
KG055CP0*RBC	5.5000	139.700	7.5000	190.500	1.0000	25.400	6.250	158.75	6.750	171.45	0.080	2.03	1/2
KA060CP0*RBC	6.0000	152.400	6.5000	165.100	0.2500	6.350	6.188	157.18	6.313	160.35	0.025	0.64	1/8
KB060CP0*RBC	6.0000	152.400	6.6250	168.275	0.3125	7.938	6.234	158.34	6.391	162.33	0.032	0.81	5/32
KC060CP0*RBC	6.0000	152.400	6.7500	171.450	0.3750	9.525	6.281	159.54	6.469	164.31	0.040	1.02	3/16
KD060CP0*RBC	6.0000	152.400	7.0000	177.800	0.5000	12.700	6.375	161.93	6.625	168.28	0.060	1.52	1/4
KF060CP0*RBC	6.0000	152.400	7.5000	190.500	0.7500	19.050	6.563	166.70	6.938	176.23	0.080	2.03	3/8
KG060CP0*RBC	6.0000	152.400	8.0000	203.200	1.0000	25.400	6.750	171.45	7.250	184.15	0.080	2.03	1/2
KA065CP0*RBC	6.5000	165.100	7.0000	177.800	0.2500	6.350	6.688	169.88	6.813	173.05	0.025	0.64	1/8
KB065CP0*RBC	6.5000	165.100	7.1250	180.975	0.3125	7.938	6.734	171.04	6.891	175.03	0.032	0.81	5/32
KC065CP0*RBC	6.5000	165.100	7.2500	184.150	0.3750	9.525	6.781	172.24	6.969	177.01	0.040	1.02	3/16
KD065CP0*RBC	6.5000	165.100	7.5000	190.500	0.5000	12.700	6.875	174.63	7.125	180.98	0.060	1.52	1/4
KF065CP0*RBC	6.5000	165.100	8.0000	203.200	0.7500	19.050	7.063	179.40	7.438	188.93	0.080	2.03	3/8
KG065CP0*RBC	6.5000	165.100	8.5000	215.900	1.0000	25.400	7.250	184.15	7.750	196.85	0.080	2.03	1/2
KA070CP0*RBC	7.0000	177.800	7.5000	190.500	0.2500	6.350	7.188	182.58	7.313	185.75	0.025	0.64	1/8
KB070CP0*RBC	7.0000	177.800	7.6250	193.675	0.3125	7.938	7.234	183.74	7.391	187.73	0.032	0.81	5/32
KC070CP0*RBC	7.0000	177.800	7.7500	196.850	0.3750	9.525	7.281	184.94	7.469	189.71	0.040	1.02	3/16
KD070CP0*RBC	7.0000	177.800	8.0000	203.200	0.5000	12.700	7.375	187.33	7.625	193.68	0.060	1.52	1/4
KF070CP0*RBC	7.0000	177.800	8.5000	215.900	0.7500	19.050	7.563	192.10	7.938	201.63	0.080	2.03	3/8
KG070CP0*RBC	7.0000	177.800	9.0000	228.600	1.0000	25.400	7.750	196.85	8.250	209.55	0.080	2.03	1/2
KA075CP0*RBC	7.5000	190.500	8.0000	203.200	0.2500	6.350	7.688	195.28	7.813	198.45	0.025	0.64	1/8
KB075CP0*RBC	7.5000	190.500	8.1250	206.375	0.3125	7.938	7.734	196.44	7.891	200.43	0.032	0.81	5/32
KC075CP0*RBC	7.5000	190.500	8.2500	209.550	0.3750	9.525	7.781	197.64	7.969	202.41	0.040	1.02	3/16
KD075CP0*RBC	7.5000	190.500	8.5000	215.900	0.5000	12.700	7.875	200.03	8.125	206.38	0.060	1.52	1/4
KF075CP0*RBC	7.5000	190.500	9.0000	228.600	0.7500	19.050	8.063	204.80	8.438	214.33	0.080	2.03	3/8
KG075CP0*RBC	7.5000	190.500	9.5000	241.300	1.0000	25.400	8.250	209.55	8.750	222.25	0.080	2.03	1/2
KA080CP0*RBC	8.0000	203.200	8.5000	215.900	0.2500	6.350	8.188	207.98	8.313	211.15	0.025	0.64	1/8
KB080CP0*RBC	8.0000	203.200	8.6250	219.075	0.3125	7.938	8.234	209.14	8.391	213.13	0.032	0.81	5/32
KC080CP0*RBC	8.0000	203.200	8.7500	222.250	0.3750	9.525	8.281	210.34	8.469	215.11	0.040	1.02	3/16
KD080CP0*RBC	8.0000	203.200	9.0000	228.600	0.5000	12.700	8.375	212.73	8.625	219.08	0.060	1.52	1/4
KF080CP0*RBC	8.0000	203.200	9.5000	241.300	0.7500	19.050	8.563	217.50	8.938	227.03	0.080	2.03	3/8
KG080CP0*RBC	8.0000	203.200	10.0000	254.000	1.0000	25.400	8.750	222.25	9.250	234.95	0.080	2.03	1/2
KA090CP0*RBC	9.0000	228.600	9.5000	241.300	0.2500	6.350	9.188	233.38	9.313	236.55	0.025	0.64	1/8
KB090CP0*RBC	9.0000	228.600	9.6250	244.475	0.3125	7.938	9.234	234.54	9.391	238.53	0.032	0.81	5/32
KC090CP0*RBC	9.0000	228.600	9.7500	247.650	0.3750	9.525	9.281	235.74	9.469	240.51	0.040	1.02	3/16
KD090CP0*RBC	9.0000	228.600	10.0000	254.000	0.5000	12.700	9.375	238.13	9.625	244.48	0.060	1.52	1/4
KF090CP0*RBC	9.0000	228.600	10.5000	266.700	0.7500	19.050	9.563	242.90	9.938	252.43	0.080	2.03	3/8
KG090CP0*RBC	9.0000	228.600	11.0000	279.400	1.0000	25.400	9.750	247.65	10.250	260.35	0.080	2.03	1/2
KA100CP0*RBC	10.0000	254.000	10.5000	266.700	0.2500	6.350	10.188	258.78	10.313	261.95	0.025	0.64	1/8
KB100CP0*RBC	10.0000	254.000	10.6250	269.875	0.3125	7.938	10.234	259.94	10.391	263.93	0.032	0.81	5/32
KC100CP0*RBC	10.0000	254.000	10.7500	273.050	0.3750	9.525	10.281	261.14	10.469	265.91	0.040	1.02	3/16
KD100CP0*RBC	10.0000	254.000	11.0000	279.400	0.5000	12.700	10.375	263.53	10.625	269.88	0.060	1.52	1/4
KF100CP0*RBC	10.0000	254.000	11.5000	292.100	0.7500	19.050	10.563	268.30	10.938	277.83	0.080	2.03	3/8
KG100CP0*RBC	10.0000	254.000	12.0000	304.800	1.0000	25.400	10.750	273.05	11.250	285.75	0.080	2.03	1/2

*The alphanumeric identification system is used under license.

- 52100 Steel
- Large Diameter
- Light Weight
- Small Cross Section
- Snap-Over Ball Separator

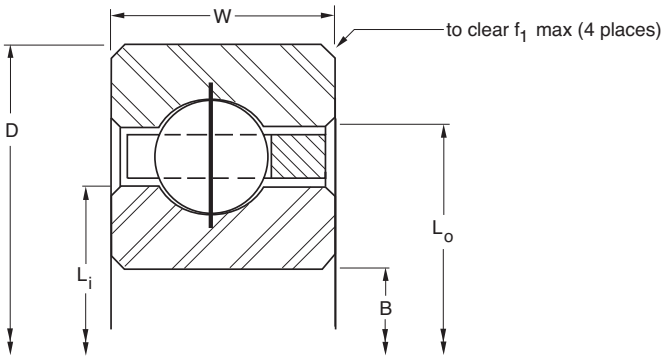

Ball Quantity	Approx. Weight lbs.	Approx. Weight kg	Radial Static lbf	Radial Static N	Radial Dynamic lbf	Radial Dynamic N	Thrust Static lbf	Thrust Static N	Thrust Dynamic lbf	Thrust Dynamic N	Moment Static lbf - in	Moment Static Nm	Moment Dynamic lbf - in	Moment Dynamic Nm	PART NUMBER*
36	1.06	0.481	4,100	18,240	2,510	11,170	N/A	N/A	N/A	N/A	N/A	N/A	N/A	N/A	KD055CP0*RBC
25	2.50	1.134	7,050	31,360	4,540	20,190	N/A	N/A	N/A	N/A	N/A	N/A	N/A	N/A	KF055CP0*RBC
19	4.70	2.132	10,400	46,260	7,850	34,920	N/A	N/A	N/A	N/A	N/A	N/A	N/A	N/A	KG055CP0*RBC
75	0.28	0.127	1,900	8,450	830	3,690	N/A	N/A	N/A	N/A	N/A	N/A	N/A	N/A	KA060CP0*RBC
63	0.44	0.200	2,560	11,390	1,170	5,200	N/A	N/A	N/A	N/A	N/A	N/A	N/A	N/A	KB060CP0*RBC
51	0.63	0.286	3,070	13,660	1,490	6,630	N/A	N/A	N/A	N/A	N/A	N/A	N/A	N/A	KC060CP0*RBC
39	1.16	0.526	4,450	19,790	2,580	11,480	N/A	N/A	N/A	N/A	N/A	N/A	N/A	N/A	KD060CP0*RBC
27	2.70	1.225	7,620	33,900	4,660	20,730	N/A	N/A	N/A	N/A	N/A	N/A	N/A	N/A	KF060CP0*RBC
21	5.10	2.313	11,490	51,110	8,390	37,320	N/A	N/A	N/A	N/A	N/A	N/A	N/A	N/A	KG060CP0*RBC
81	0.30	0.136	2,050	9,120	850	3,780	N/A	N/A	N/A	N/A	N/A	N/A	N/A	N/A	KA065CP0*RBC
68	0.47	0.213	2,760	12,280	1,200	5,340	N/A	N/A	N/A	N/A	N/A	N/A	N/A	N/A	KB065CP0*RBC
55	0.68	0.308	3,310	14,720	1,530	6,810	N/A	N/A	N/A	N/A	N/A	N/A	N/A	N/A	KC065CP0*RBC
42	1.22	0.553	4,790	21,310	2,650	11,790	N/A	N/A	N/A	N/A	N/A	N/A	N/A	N/A	KD065CP0*RBC
29	2.90	1.315	8,180	36,390	4,790	21,310	N/A	N/A	N/A	N/A	N/A	N/A	N/A	N/A	KF065CP0*RBC
22	5.40	2.449	12,040	53,560	8,520	37,900	N/A	N/A	N/A	N/A	N/A	N/A	N/A	N/A	KG065CP0*RBC
87	0.31	0.141	2,200	9,790	870	3,870	N/A	N/A	N/A	N/A	N/A	N/A	N/A	N/A	KA070CP0*RBC
73	0.50	0.227	2,970	13,210	1,240	5,520	N/A	N/A	N/A	N/A	N/A	N/A	N/A	N/A	KB070CP0*RBC
59	0.73	0.331	3,550	15,790	1,570	6,980	N/A	N/A	N/A	N/A	N/A	N/A	N/A	N/A	KC070CP0*RBC
45	1.31	0.594	5,130	22,820	2,730	12,140	N/A	N/A	N/A	N/A	N/A	N/A	N/A	N/A	KD070CP0*RBC
31	3.20	1.451	8,750	38,920	4,920	21,890	N/A	N/A	N/A	N/A	N/A	N/A	N/A	N/A	KF070CP0*RBC
24	5.80	2.631	13,130	58,410	8,880	39,500	N/A	N/A	N/A	N/A	N/A	N/A	N/A	N/A	KG070CP0*RBC
93	0.34	0.154	2,350	10,450	890	3,960	N/A	N/A	N/A	N/A	N/A	N/A	N/A	N/A	KA075CP0*RBC
78	0.53	0.240	3,170	14,100	1,280	5,690	N/A	N/A	N/A	N/A	N/A	N/A	N/A	N/A	KB075CP0*RBC
63	0.78	0.354	3,790	16,860	1,600	7,120	N/A	N/A	N/A	N/A	N/A	N/A	N/A	N/A	KC075CP0*RBC
48	1.41	0.640	5,470	24,330	2,800	12,460	N/A	N/A	N/A	N/A	N/A	N/A	N/A	N/A	KD075CP0*RBC
33	3.40	1.542	9,310	41,410	5,040	22,420	N/A	N/A	N/A	N/A	N/A	N/A	N/A	N/A	KF075CP0*RBC
25	6.10	2.767	13,680	60,850	8,960	39,860	N/A	N/A	N/A	N/A	N/A	N/A	N/A	N/A	KG075CP0*RBC
99	0.38	0.172	2,500	11,120	910	4,050	N/A	N/A	N/A	N/A	N/A	N/A	N/A	N/A	KA080CP0*RBC
83	0.57	0.259	3,370	14,990	1,280	5,690	N/A	N/A	N/A	N/A	N/A	N/A	N/A	N/A	KB080CP0*RBC
67	0.84	0.381	4,030	17,930	1,650	7,340	N/A	N/A	N/A	N/A	N/A	N/A	N/A	N/A	KC080CP0*RBC
51	1.53	0.694	5,810	25,840	2,860	12,720	N/A	N/A	N/A	N/A	N/A	N/A	N/A	N/A	KD080CP0*RBC
35	3.50	1.588	9,880	43,950	5,140	22,860	N/A	N/A	N/A	N/A	N/A	N/A	N/A	N/A	KF080CP0*RBC
27	6.50	2.948	14,770	65,700	9,300	41,370	N/A	N/A	N/A	N/A	N/A	N/A	N/A	N/A	KG080CP0*RBC
111	0.44	0.200	2,810	12,500	940	4,180	N/A	N/A	N/A	N/A	N/A	N/A	N/A	N/A	KA090CP0*RBC
93	0.66	0.299	3,780	16,810	1,330	5,920	N/A	N/A	N/A	N/A	N/A	N/A	N/A	N/A	KB090CP0*RBC
75	0.94	0.426	4,510	20,060	1,730	7,700	N/A	N/A	N/A	N/A	N/A	N/A	N/A	N/A	KC090CP0*RBC
57	1.72	0.780	6,500	28,910	2,970	13,210	N/A	N/A	N/A	N/A	N/A	N/A	N/A	N/A	KD090CP0*RBC
39	3.90	1.769	11,000	48,930	5,360	23,840	N/A	N/A	N/A	N/A	N/A	N/A	N/A	N/A	KF090CP0*RBC
30	7.20	3.266	16,420	73,040	9,720	43,240	N/A	N/A	N/A	N/A	N/A	N/A	N/A	N/A	KG090CP0*RBC
123	0.50	0.227	3,110	13,830	990	4,400	N/A	N/A	N/A	N/A	N/A	N/A	N/A	N/A	KA100CP0*RBC
103	0.73	0.331	4,190	18,640	1,400	6,230	N/A	N/A	N/A	N/A	N/A	N/A	N/A	N/A	KB100CP0*RBC
83	1.06	0.481	4,990	22,200	1,781	7,920	N/A	N/A	N/A	N/A	N/A	N/A	N/A	N/A	KC100CP0*RBC
63	1.88	0.853	7,180	31,940	3,070	13,660	N/A	N/A	N/A	N/A	N/A	N/A	N/A	N/A	KD100CP0*RBC
43	4.30	1.950	12,130	53,960	5,550	24,690	N/A	N/A	N/A	N/A	N/A	N/A	N/A	N/A	KF100CP0*RBC
33	7.90	3.583	18,060	80,330	10,040	44,660	N/A	N/A	N/A	N/A	N/A	N/A	N/A	N/A	KG100CP0*RBC

Refer to the Engineering section for load and speed limitations.

RADIAL CONTACT, C-TYPE

THIN SECTION BALL BEARINGS

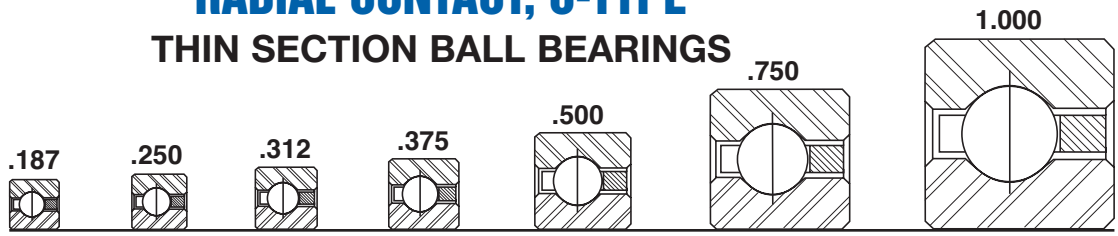

Series:	KAA	KA	KB	KC	KD	KF	KG
Cross Section Size:	3/16"	1/4"	5/16"	3/8"	1/2"	3/4"	1"

PART NUMBER*	NOMINAL DIMENSIONS												
	B Bore		D Outside Diameter		W Width		Land Diameter L_i -Inner Ring		Land Diameter L_o -Outer Ring		f_1 Housing Fillet		Ball Diameter
	in.	mm	in.	mm	in.	mm	in.	mm	in.	mm	in.	mm	in.
KA110CP0*RBC	11.0000	279.400	11.5000	292.100	0.2500	6.350	11.188	284.18	11.313	287.35	0.025	0.64	1/8
KB110CP0*RBC	11.0000	279.400	11.6250	295.275	0.3125	7.938	11.234	285.34	11.391	289.33	0.032	0.81	5/32
KC110CP0*RBC	11.0000	279.400	11.7500	298.450	0.3750	9.525	11.281	286.54	11.469	291.31	0.040	1.02	3/16
KD110CP0*RBC	11.0000	279.400	12.0000	304.800	0.5000	12.700	11.375	288.93	11.625	295.28	0.060	1.52	1/4
KF110CP0*RBC	11.0000	279.400	12.5000	317.500	0.7500	19.050	11.563	293.70	11.938	303.23	0.080	2.03	3/8
KG110CP0*RBC	11.0000	279.400	13.0000	330.200	1.0000	25.400	11.750	298.45	12.250	311.15	0.080	2.03	1/2
KA120CP0*RBC	12.0000	304.800	12.5000	317.500	0.2500	6.350	12.188	309.58	12.313	312.75	0.025	0.64	1/8
KB120CP0*RBC	12.0000	304.800	12.6250	320.675	0.3125	7.938	12.234	310.74	12.391	314.73	0.032	0.81	5/32
KC120CP0*RBC	12.0000	304.800	12.7500	323.850	0.3750	9.525	12.281	311.94	12.469	316.71	0.040	1.02	3/16
KD120CP0*RBC	12.0000	304.800	13.0000	330.200	0.5000	12.700	12.375	314.33	12.625	320.68	0.060	1.52	1/4
KF120CP0*RBC	12.0000	304.800	13.5000	342.900	0.7500	19.050	12.563	319.10	12.938	328.63	0.080	2.03	3/8
KG120CP0*RBC	12.0000	304.800	14.0000	355.600	1.0000	25.400	12.750	323.85	13.250	336.55	0.080	2.03	1/2
KB140CP0*RBC	14.0000	355.600	14.6250	371.475	0.3125	7.938	14.234	361.54	14.391	365.53	0.032	0.81	5/32
KC140CP0*RBC	14.0000	355.600	14.7500	374.650	0.3750	9.525	14.281	362.74	14.469	367.51	0.040	1.02	3/16
KD140CP0*RBC	14.0000	355.600	15.0000	381.000	0.5000	12.700	14.375	365.13	14.625	371.48	0.060	1.52	1/4
KF140CP0*RBC	14.0000	355.600	15.5000	393.700	0.7500	19.050	14.563	369.90	14.938	379.43	0.080	2.03	3/8
KG140CP0*RBC	14.0000	355.600	16.0000	406.400	1.0000	25.400	14.750	374.65	15.250	387.35	0.080	2.03	1/2
KB160CP0*RBC	16.0000	406.400	16.6250	422.275	0.3125	7.938	16.234	412.34	16.391	416.33	0.032	0.81	5/32
KC160CP0*RBC	16.0000	406.400	16.7500	425.450	0.3750	9.525	16.281	413.54	16.469	418.31	0.040	1.02	3/16
KD160CP0*RBC	16.0000	406.400	17.0000	431.800	0.5000	12.700	16.375	415.93	16.625	422.28	0.060	1.52	1/4
KF160CP0*RBC	16.0000	406.400	17.5000	444.500	0.7500	19.050	16.563	420.70	16.938	430.23	0.080	2.03	3/8
KG160CP0*RBC	16.0000	406.400	18.0000	457.200	1.0000	25.400	16.750	425.45	17.250	438.15	0.080	2.03	1/2
KB180CP0*RBC	18.0000	457.200	18.6250	473.075	0.3125	7.938	18.234	463.14	18.391	467.13	0.032	0.81	5/32
KC180CP0*RBC	18.0000	457.200	18.7500	476.250	0.3750	9.525	18.281	464.34	18.469	469.11	0.040	1.02	3/16
KD180CP0*RBC	18.0000	457.200	19.0000	482.600	0.5000	12.700	18.375	466.73	18.625	473.08	0.060	1.52	1/4
KF180CP0*RBC	18.0000	457.200	19.5000	495.300	0.7500	19.050	18.563	471.50	18.938	481.03	0.080	2.03	3/8
KG180CP0*RBC	18.0000	457.200	20.0000	508.000	1.0000	25.400	18.750	476.25	19.250	488.95	0.080	2.03	1/2
KB200CP0*RBC	20.0000	508.000	20.6250	523.875	0.3125	7.938	20.234	513.94	20.391	517.93	0.032	0.81	5/32
KC200CP0*RBC	20.0000	508.000	20.7500	527.050	0.3750	9.525	20.281	515.14	20.469	519.91	0.040	1.02	3/16
KD200CP0*RBC	20.0000	508.000	21.0000	533.400	0.5000	12.700	20.375	517.53	20.625	523.88	0.060	1.52	1/4
KF200CP0*RBC	20.0000	508.000	21.5000	546.100	0.7500	19.050	20.563	522.30	20.938	531.83	0.080	2.03	3/8
KG200CP0*RBC	20.0000	508.000	22.0000	558.800	1.0000	25.400	20.750	527.05	21.250	539.75	0.080	2.03	1/2
KC250CP0*RBC	25.0000	635.000	25.7500	654.050	0.3750	9.525	25.281	642.14	25.469	646.91	0.040	1.02	3/16
KD250CP0*RBC	25.0000	635.000	26.0000	660.400	0.5000	12.700	25.375	644.53	25.625	650.88	0.060	1.52	1/4
KF250CP0*RBC	25.0000	635.000	26.5000	673.100	0.7500	19.050	25.563	649.30	25.938	658.83	0.080	2.03	3/8
KG250CP0*RBC	25.0000	635.000	27.0000	685.800	1.0000	25.400	25.750	654.05	26.250	666.75	0.080	2.03	1/2
KG275CP0*RBC	27.5000	698.500	29.5000	749.300	1.0000	25.400	28.250	717.55	28.750	730.25	0.080	2.03	1/2
KC300CP0*RBC	30.0000	762.000	30.7500	781.050	0.3750	9.525	30.281	769.14	30.469	773.91	0.040	1.02	3/16
KD300CP0*RBC	30.0000	762.000	31.0000	787.400	0.5000	12.700	30.375	771.53	30.625	777.88	0.060	1.52	1/4
KF300CP0*RBC	30.0000	762.000	31.5000	800.100	0.7500	19.050	30.563	776.30	30.938	785.83	0.080	2.03	3/8
KG300CP0*RBC	30.0000	762.000	32.0000	812.800	1.0000	25.400	30.750	781.05	31.250	793.75	0.080	2.03	1/2
KG325CP0*RBC	32.5000	825.500	34.5000	876.300	1.0000	25.400	33.250	831.85	33.750	857.25	0.080	2.03	1/2
KF350CP0*RBC	35.0000	889.000	36.5000	927.100	0.7500	19.050	35.563	903.30	35.938	912.83	0.080	2.03	3/8
KG350CP0*RBC	35.0000	889.000	37.0000	939.800	1.0000	25.400	35.750	908.05	36.250	920.75	0.080	2.03	1/2
KG375CP0*RBC	37.5000	952.500	39.5000	1003.300	1.0000	25.400	38.250	971.55	38.750	984.25	0.080	2.03	1/2
KF400CP0*RBC	40.0000	1016.000	41.5000	1054.100	0.7500	19.050	40.563	1030.30	40.938	1039.83	0.080	2.03	3/8
KG400CP0*RBC	40.0000	1016.000	42.0000	1066.800	1.0000	25.400	40.750	1035.05	41.250	1047.75	0.080	2.03	1/2

*The alphanumeric identification system is used under license.

- 52100 Steel
- Large Diameter
- Light Weight
- Small Cross Section
- Snap-Over Ball Separator

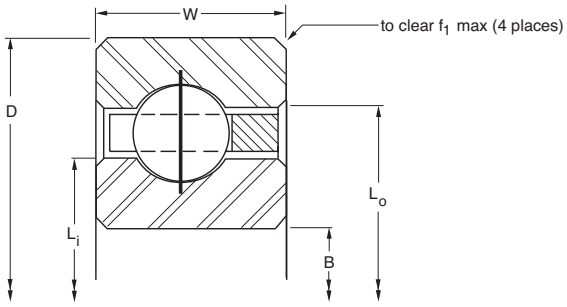

Ball Quantity	Approx. Weight lbs.	Approx. Weight kg	Radial Static lbf	Radial Static N	Radial Dynamic lbf	Radial Dynamic N	Thrust Static lbf	Thrust Static N	Thrust Dynamic lbf	Thrust Dynamic N	Moment Static lbf - in	Moment Static Nm	Moment Dynamic lbf - in	Moment Dynamic Nm	PART NUMBER*
135	0.52	0.236	3,410	15,170	1,030	4,580	N/A	N/A	N/A	N/A	N/A	N/A	N/A	N/A	KA110CP0*RBC
113	0.75	0.340	4,590	20,420	1,464	6,510	N/A	N/A	N/A	N/A	N/A	N/A	N/A	N/A	KB110CP0*RBC
91	1.16	0.526	5,470	24,330	1,879	8,360	N/A	N/A	N/A	N/A	N/A	N/A	N/A	N/A	KC110CP0*RBC
69	2.06	0.934	7,870	35,010	3,180	14,150	N/A	N/A	N/A	N/A	N/A	N/A	N/A	N/A	KD110CP0*RBC
47	4.80	2.177	13,260	58,980	5,833	25,950	N/A	N/A	N/A	N/A	N/A	N/A	N/A	N/A	KF110CP0*RBC
36	8.60	3.901	19,700	87,630	10,360	46,080	N/A	N/A	N/A	N/A	N/A	N/A	N/A	N/A	KG110CP0*RBC
147	0.56	0.254	3,720	16,550	1,078	4,800	N/A	N/A	N/A	N/A	N/A	N/A	N/A	N/A	KA120CP0*RBC
123	0.83	0.376	5,000	22,240	1,539	6,850	N/A	N/A	N/A	N/A	N/A	N/A	N/A	N/A	KB120CP0*RBC
99	1.25	0.567	5,950	26,470	1,974	8,780	N/A	N/A	N/A	N/A	N/A	N/A	N/A	N/A	KC120CP0*RBC
75	2.25	1.021	8,550	38,030	3,320	14,770	N/A	N/A	N/A	N/A	N/A	N/A	N/A	N/A	KD120CP0*RBC
51	5.20	2.359	14,390	64,010	6,105	27,160	N/A	N/A	N/A	N/A	N/A	N/A	N/A	N/A	KF120CP0*RBC
39	9.30	4.218	21,340	94,930	10,690	47,550	N/A	N/A	N/A	N/A	N/A	N/A	N/A	N/A	KG120CP0*RBC
143	1.05	0.476	5,810	25,840	1,680	7,470	N/A	N/A	N/A	N/A	N/A	N/A	N/A	N/A	KB140CP0*RBC
115	1.52	0.689	6,910	30,740	2,154	9,580	N/A	N/A	N/A	N/A	N/A	N/A	N/A	N/A	KC140CP0*RBC
87	2.73	1.238	9,920	44,130	3,460	15,390	N/A	N/A	N/A	N/A	N/A	N/A	N/A	N/A	KD140CP0*RBC
59	6.00	2.722	16,650	74,060	6,620	29,450	N/A	N/A	N/A	N/A	N/A	N/A	N/A	N/A	KF140CP0*RBC
45	10.80	4.899	24,620	109,520	11,280	50,180	N/A	N/A	N/A	N/A	N/A	N/A	N/A	N/A	KG140CP0*RBC
163	1.20	0.544	6,620	29,450	1,812	8,060	N/A	N/A	N/A	N/A	N/A	N/A	N/A	N/A	KB160CP0*RBC
131	1.73	0.785	7,880	35,050	2,321	10,320	N/A	N/A	N/A	N/A	N/A	N/A	N/A	N/A	KC160CP0*RBC
99	3.10	1.406	11,290	50,220	3,688	16,410	N/A	N/A	N/A	N/A	N/A	N/A	N/A	N/A	KD160CP0*RBC
67	7.10	3.221	18,900	84,070	7,104	31,600	N/A	N/A	N/A	N/A	N/A	N/A	N/A	N/A	KF160CP0*RBC
51	12.30	5.579	27,910	124,150	11,820	52,580	N/A	N/A	N/A	N/A	N/A	N/A	N/A	N/A	KG160CP0*RBC
183	1.35	0.612	7,440	33,090	1,936	8,610	N/A	N/A	N/A	N/A	N/A	N/A	N/A	N/A	KB180CP0*RBC
147	1.94	0.880	8,840	39,320	2,478	11,020	N/A	N/A	N/A	N/A	N/A	N/A	N/A	N/A	KC180CP0*RBC
111	3.48	1.579	12,650	56,270	3,933	17,490	N/A	N/A	N/A	N/A	N/A	N/A	N/A	N/A	KD180CP0*RBC
75	7.90	3.583	21,160	94,120	7,557	33,620	N/A	N/A	N/A	N/A	N/A	N/A	N/A	N/A	KF180CP0*RBC
57	13.70	6.214	31,190	138,740	12,367	55,010	N/A	N/A	N/A	N/A	N/A	N/A	N/A	N/A	KG180CP0*RBC
203	1.50	0.680	8,250	36,700	2,053	9,130	N/A	N/A	N/A	N/A	N/A	N/A	N/A	N/A	KB200CP0*RBC
163	2.16	0.980	9,800	43,590	2,626	11,680	N/A	N/A	N/A	N/A	N/A	N/A	N/A	N/A	KC200CP0*RBC
123	3.85	1.746	14,020	62,360	4,164	18,520	N/A	N/A	N/A	N/A	N/A	N/A	N/A	N/A	KD200CP0*RBC
83	8.90	4.037	23,420	104,180	7,986	35,520	N/A	N/A	N/A	N/A	N/A	N/A	N/A	N/A	KF200CP0*RBC
63	15.80	7.167	34,470	153,330	13,044	58,020	N/A	N/A	N/A	N/A	N/A	N/A	N/A	N/A	KG200CP0*RBC
203	2.69	1.220	12,200	54,270	2,962	13,180	N/A	N/A	N/A	N/A	N/A	N/A	N/A	N/A	KC250CP0*RBC
153	4.79	2.173	17,440	77,580	4,689	20,860	N/A	N/A	N/A	N/A	N/A	N/A	N/A	N/A	KD250CP0*RBC
103	10.90	4.944	29,060	129,270	8,963	39,870	N/A	N/A	N/A	N/A	N/A	N/A	N/A	N/A	KF250CP0*RBC
78	19.50	8.845	42,680	189,850	14,591	64,900	N/A	N/A	N/A	N/A	N/A	N/A	N/A	N/A	KG250CP0*RBC
86	21.50	9.761	46,785	208,110	15,277	67,955	N/A	N/A	N/A	N/A	N/A	N/A	N/A	N/A	KG275CP0*RBC
243	3.21	1.456	14,610	64,990	3,260	14,500	N/A	N/A	N/A	N/A	N/A	N/A	N/A	N/A	KC300CP0*RBC
183	5.73	2.599	20,860	92,790	5,153	22,920	N/A	N/A	N/A	N/A	N/A	N/A	N/A	N/A	KD300CP0*RBC
123	13.00	5.897	34,700	154,350	9,828	43,720	N/A	N/A	N/A	N/A	N/A	N/A	N/A	N/A	KF300CP0*RBC
93	23.30	10.569	50,890	226,370	15,963	71,010	N/A	N/A	N/A	N/A	N/A	N/A	N/A	N/A	KG300CP0*RBC
101	25.20	11.441	54,995	244,630	16,579	73,747	N/A	N/A	N/A	N/A	N/A	N/A	N/A	N/A	KG325CP0*RBC
143	15.10	6.849	40,350	179,490	10,603	47,160	N/A	N/A	N/A	N/A	N/A	N/A	N/A	N/A	KF350CP0*RBC
108	27.10	12.292	59,100	262,890	17,195	76,490	N/A	N/A	N/A	N/A	N/A	N/A	N/A	N/A	KG350CP0*RBC
116	29.00	13.166	63,205	281,150	17,571	78,960	N/A	N/A	N/A	N/A	N/A	N/A	N/A	N/A	KG375CP0*RBC
163	17.20	7.802	45,990	204,570	11,302	50,270	N/A	N/A	N/A	N/A	N/A	N/A	N/A	N/A	KF400CP0*RBC
123	30.80	13.971	67,310	299,410	18,307	81,430	N/A	N/A	N/A	N/A	N/A	N/A	N/A	N/A	KG400CP0*RBC

Refer to the Engineering section for load and speed limitations.

ANGULAR CONTACT, A-TYPE

THIN SECTION BALL BEARINGS

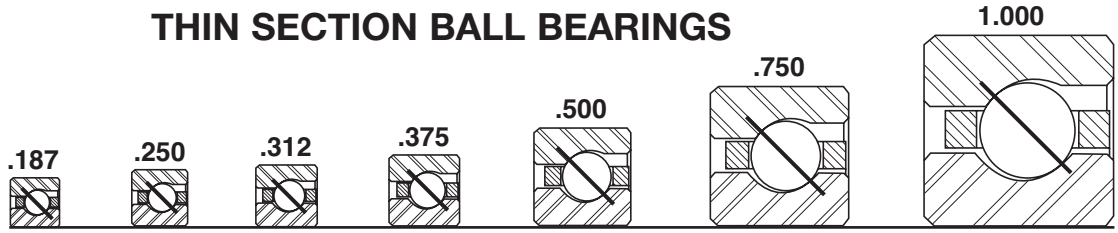

Series:	KAA	KA	KB	KC	KD	KF	KG
Cross Section Size:	3/16"	1/4"	5/16"	3/8"	1/2"	3/4"	1"

PART NUMBER*	NOMINAL DIMENSIONS														
	B Bore		D Outside Diameter		W Width		Land Diameter						f_1 Housing Fillet		Ball Diameter
							L_i -Inner Ring		L_o -Outer Ring		L_s -Counter Bore				
	in.	mm	in.	mm	in.	mm	in.	mm	in.	mm	in.	mm	in.	mm	in.
KAA10AG0*RBC	1.0000	25.400	1.3750	34.925	0.1875	4.763	1.141	28.98	1.234	31.34	1.235	31.37	0.015	0.38	3/32
KAA15AG0*RBC	1.5000	38.100	1.8750	47.625	0.1875	4.763	1.641	41.68	1.734	44.04	1.735	44.07	0.015	0.38	3/32
KAA17AG0*RBC	1.7500	44.450	2.1250	53.975	0.1875	4.763	1.890	48.01	1.985	50.42	2.024	51.41	0.015	0.38	3/32
KA020AR0*RBC	2.0000	50.800	2.5000	63.500	0.2500	6.350	2.188	55.58	2.313	58.75	2.375	60.33	0.025	0.64	1/8
KB020AR0*RBC	2.0000	50.800	2.6250	66.675	0.3125	7.938	2.234	56.74	2.391	60.73	2.469	62.71	0.032	0.81	5/32
KA025AR0*RBC	2.5000	63.500	3.0000	76.200	0.2500	6.350	2.688	68.28	2.813	71.45	2.875	73.03	0.025	0.64	1/8
KB025AR0*RBC	2.5000	63.500	3.1250	79.375	0.3125	7.938	2.734	69.44	2.891	73.43	2.969	75.41	0.032	0.81	5/32
KA030AR0*RBC	3.0000	76.200	3.5000	88.900	0.2500	6.350	3.188	80.98	3.313	84.15	3.375	85.73	0.025	0.64	1/8
KB030AR0*RBC	3.0000	76.200	3.6250	92.075	0.3125	7.938	3.234	82.14	3.391	86.13	3.469	88.11	0.032	0.81	5/32
KA035AR0*RBC	3.5000	88.900	4.0000	101.600	0.2500	6.350	3.688	93.68	3.813	96.85	3.875	98.43	0.025	0.64	1/8
KB035AR0*RBC	3.5000	88.900	4.1250	104.775	0.3125	7.938	3.734	94.84	3.891	98.83	3.969	100.81	0.032	0.81	5/32
KA040AR0*RBC	4.0000	101.600	4.5000	114.300	0.2500	6.350	4.188	106.38	4.313	109.55	4.375	111.13	0.025	0.64	1/8
KB040AR0*RBC	4.0000	101.600	4.6250	117.475	0.3125	7.938	4.234	107.54	4.391	111.53	4.469	113.51	0.032	0.81	5/32
KC040AR0*RBC	4.0000	101.600	4.7500	120.650	0.3750	9.525	4.281	108.74	4.469	113.51	4.563	115.90	0.040	1.02	3/16
KD040AR0*RBC	4.0000	101.600	5.0000	127.000	0.5000	12.700	4.375	111.13	4.625	117.48	4.750	120.65	0.060	1.52	1/4
KF040AR0*RBC	4.0000	101.600	5.5000	139.700	0.7500	19.050	4.563	115.90	4.938	125.43	5.125	130.18	0.080	2.03	3/8
KG040AR0*RBC	4.0000	101.600	6.0000	152.400	1.0000	25.400	4.750	120.65	5.250	133.35	5.500	139.70	0.080	2.03	1/2
KA042AR0*RBC	4.2500	107.950	4.7500	120.650	0.2500	6.350	4.438	112.73	4.563	115.90	4.625	117.48	0.025	0.64	1/8
KB042AR0*RBC	4.2500	107.950	4.8750	123.825	0.3125	7.938	4.484	113.89	4.641	117.88	4.719	119.86	0.032	0.81	5/32
KC042AR0*RBC	4.2500	107.950	5.0000	127.000	0.3750	9.525	4.531	115.09	4.719	119.86	4.813	122.25	0.040	1.02	3/16
KD042AR0*RBC	4.2500	107.950	5.2500	133.350	0.5000	12.700	4.625	117.48	4.875	123.83	5.000	127.00	0.060	1.52	1/4
KF042AR0*RBC	4.2500	107.950	5.7500	146.050	0.7500	19.050	4.813	122.25	5.188	131.78	5.375	136.53	0.080	2.03	3/8
KG042AR0*RBC	4.2500	107.950	6.2500	158.750	1.0000	25.400	5.000	127.00	5.500	139.70	5.750	146.05	0.080	2.03	1/2
KA045AR0*RBC	4.5000	114.300	5.0000	127.000	0.2500	6.350	4.688	119.08	4.813	122.25	4.875	123.83	0.025	0.64	1/8
KB045AR0*RBC	4.5000	114.300	5.1250	130.175	0.3125	7.938	4.734	120.24	4.891	124.23	4.969	126.21	0.032	0.81	5/32
KC045AR0*RBC	4.5000	114.300	5.2500	133.350	0.3750	9.525	4.781	121.44	4.969	126.21	5.063	128.60	0.040	1.02	3/16
KD045AR0*RBC	4.5000	114.300	5.5000	139.700	0.5000	12.700	4.875	123.83	5.125	130.18	5.250	133.35	0.060	1.52	1/4
KF045AR0*RBC	4.5000	114.300	6.0000	152.400	0.7500	19.050	5.063	128.60	5.438	138.13	5.625	142.88	0.080	2.03	3/8
KG045AR0*RBC	4.5000	114.300	6.5000	165.100	1.0000	25.400	5.250	133.35	5.750	146.05	6.000	152.40	0.080	2.03	1/2
KA047AR0*RBC	4.7500	120.650	5.2500	133.350	0.2500	6.350	4.938	125.43	5.063	128.60	5.125	130.18	0.025	0.64	1/8
KB047AR0*RBC	4.7500	120.650	5.3750	136.525	0.3125	7.938	4.984	126.59	5.141	130.58	5.219	132.56	0.032	0.81	5/32
KC047AR0*RBC	4.7500	120.650	5.5000	139.700	0.3750	9.525	5.031	127.79	5.219	132.56	5.313	134.95	0.040	1.02	3/16
KD047AR0*RBC	4.7500	120.650	5.7500	146.050	0.5000	12.700	5.125	130.18	5.375	136.53	5.500	139.70	0.060	1.52	1/4
KF047AR0*RBC	4.7500	120.650	6.2500	158.750	0.7500	19.050	5.313	134.95	5.688	144.48	5.875	149.23	0.080	2.03	3/8
KG047AR0*RBC	4.7500	120.650	6.7500	171.450	1.0000	25.400	5.500	139.70	6.000	152.40	6.250	158.75	0.080	2.03	1/2
KA050AR0*RBC	5.0000	127.000	5.5000	139.700	0.2500	6.350	5.188	131.78	5.313	134.95	5.375	136.53	0.025	0.64	1/8
KB050AR0*RBC	5.0000	127.000	5.6250	142.875	0.3125	7.938	5.234	132.94	5.391	136.93	5.469	138.91	0.032	0.81	5/32
KC050AR0*RBC	5.0000	127.000	5.7500	146.050	0.3750	9.525	5.281	134.14	5.469	138.91	5.563	141.30	0.040	1.02	3/16
KD050AR0*RBC	5.0000	127.000	6.0000	152.400	0.5000	12.700	5.375	136.53	5.625	142.88	5.750	146.05	0.060	1.52	1/4
KF050AR0*RBC	5.0000	127.000	6.5000	165.100	0.7500	19.050	5.563	141.30	5.938	150.83	6.125	155.58	0.080	2.03	3/8
KG050AR0*RBC	5.0000	127.000	7.0000	177.800	1.0000	25.400	5.750	146.05	6.250	158.75	6.500	165.10	0.080	2.03	1/2
KA055AR0*RBC	5.5000	139.700	6.0000	152.400	0.2500	6.350	5.688	144.48	5.813	147.65	5.875	149.23	0.025	0.64	1/8
KB055AR0*RBC	5.5000	139.700	6.1250	155.575	0.3125	7.938	5.734	145.64	5.891	149.63	5.969	151.61	0.032	0.81	5/32
KC055AR0*RBC	5.5000	139.700	6.2500	158.750	0.3750	9.525	5.781	146.84	5.969	151.61	6.063	154.00	0.040	1.02	3/16
KD055AR0*RBC	5.5000	139.700	6.5000	165.100	0.5000	12.700	5.875	149.23	6.125	155.58	6.250	158.75	0.060	1.52	1/4
KF055AR0*RBC	5.5000	139.700	7.0000	177.800	0.7500	19.050	6.063	154.00	6.438	163.53	6.625	168.28	0.080	2.03	3/8

*The alphanumeric identification system is used under license.

- 52100 Steel
- Large Diameter
- Light Weight
- Small Cross Section
- Circular Pocket Ball Separator

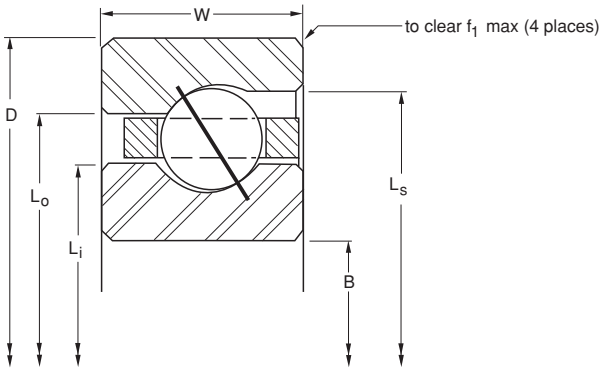

Ball Quantity	Approx. Weight lbs.	Approx. Weight kg	Radial Static lbf	Radial Static N	Radial Dynamic lbf	Radial Dynamic N	Thrust Static lbf	Thrust Static N	Thrust Dynamic lbf	Thrust Dynamic N	Moment Static lbf - in	Moment Static Nm	Moment Dynamic lbf - in	Moment Dynamic Nm	PART NUMBER*
28	0.03	0.014	340	1,510	330	1,470	970	4,310	960	4,270	N/A	N/A	N/A	N/A	KAA10AG0*RBC
40	0.04	0.018	480	2,140	380	1,690	1,380	6,140	1,100	4,890	N/A	N/A	N/A	N/A	KAA15AG0*RBC
44	0.06	0.027	530	2,360	390	1,730	1,520	6,760	1,122	4,990	N/A	N/A	N/A	N/A	KAA17AG0*RBC
36	0.10	0.045	790	3,510	600	2,670	2,280	10,140	1,730	7,700	N/A	N/A	N/A	N/A	KA020AR0*RBC
31	0.16	0.073	1,090	4,850	850	3,780	3,150	14,010	2,460	10,940	N/A	N/A	N/A	N/A	KB020AR0*RBC
44	0.13	0.059	960	4,270	640	2,850	2,780	12,370	1,860	8,270	N/A	N/A	N/A	N/A	KA025AR0*RBC
38	0.20	0.091	1,340	5,960	920	4,090	3,860	17,170	2,680	11,920	N/A	N/A	N/A	N/A	KB025AR0*RBC
52	0.15	0.068	1,140	5,070	680	3,020	3,290	14,630	1,980	8,810	N/A	N/A	N/A	N/A	KA030AR0*RBC
44	0.24	0.109	1,550	6,890	970	4,310	4,470	19,880	2,800	12,460	N/A	N/A	N/A	N/A	KB030AR0*RBC
60	0.18	0.082	1,310	5,830	720	3,200	3,790	16,860	2,070	9,210	N/A	N/A	N/A	N/A	KA035AR0*RBC
51	0.27	0.122	1,790	7,960	1,020	4,540	5,180	23,040	2,970	13,210	N/A	N/A	N/A	N/A	KB035AR0*RBC
68	0.19	0.086	1,490	6,630	750	3,340	4,300	19,130	2,180	9,700	N/A	N/A	N/A	N/A	KA040AR0*RBC
58	0.30	0.136	2,040	9,070	1,080	4,800	5,890	26,200	3,130	13,920	N/A	N/A	N/A	N/A	KB040AR0*RBC
49	0.45	0.204	2,550	11,340	1,410	6,270	7,360	32,740	4,080	18,150	N/A	N/A	N/A	N/A	KC040AR0*RBC
36	0.78	0.354	3,550	15,790	2,373	10,560	10,260	45,640	6,020	26,780	N/A	N/A	N/A	N/A	KD040AR0*RBC
26	1.90	0.862	6,350	28,250	4,350	19,350	18,340	81,580	12,620	56,140	N/A	N/A	N/A	N/A	KF040AR0*RBC
20	3.60	1.633	9,480	42,170	7,340	32,650	27,360	121,700	21,290	94,700	N/A	N/A	N/A	N/A	KG040AR0*RBC
72	0.20	0.091	1,580	7,030	770	3,430	4,550	20,240	2,240	9,960	N/A	N/A	N/A	N/A	KA042AR0*RBC
61	0.31	0.141	2,150	9,560	1,090	4,850	6,200	27,580	3,170	14,100	N/A	N/A	N/A	N/A	KB042AR0*RBC
52	0.47	0.213	2,710	12,050	1,440	6,410	7,820	34,790	4,180	18,590	N/A	N/A	N/A	N/A	KC042AR0*RBC
38	0.83	0.376	3,750	16,680	2,410	10,720	10,830	48,170	6,990	31,090	N/A	N/A	N/A	N/A	KD042AR0*RBC
27	2.00	0.907	6,600	29,360	4,390	19,530	19,050	84,740	12,740	56,670	N/A	N/A	N/A	N/A	KF042AR0*RBC
21	3.80	1.724	9,950	44,260	7,580	33,720	28,730	127,800	21,990	97,820	N/A	N/A	N/A	N/A	KG042AR0*RBC
76	0.22	0.100	1,660	7,380	780	3,470	4,810	21,400	2,260	10,050	N/A	N/A	N/A	N/A	KA045AR0*RBC
64	0.33	0.150	2,250	10,010	1,120	4,980	6,500	28,910	3,240	14,410	N/A	N/A	N/A	N/A	KB045AR0*RBC
55	0.48	0.218	2,860	12,720	1,470	6,540	8,270	36,790	4,260	18,950	N/A	N/A	N/A	N/A	KC045AR0*RBC
40	0.88	0.399	3,950	17,570	2,460	10,940	11,400	50,710	7,140	31,760	N/A	N/A	N/A	N/A	KD045AR0*RBC
29	2.10	0.953	7,090	31,540	4,550	20,240	20,460	91,010	13,200	58,720	N/A	N/A	N/A	N/A	KF045AR0*RBC
22	4.00	1.814	10,430	46,390	7,820	34,790	30,100	133,890	22,690	100,930	N/A	N/A	N/A	N/A	KG045AR0*RBC
80	0.23	0.104	1,750	7,780	800	3,560	5,060	22,510	2,310	10,280	N/A	N/A	N/A	N/A	KA047AR0*RBC
68	0.34	0.154	2,390	10,630	1,140	5,070	6,910	30,740	3,290	14,630	N/A	N/A	N/A	N/A	KB047AR0*RBC
58	0.50	0.227	3,020	13,430	1,500	6,670	8,720	38,790	4,340	19,310	N/A	N/A	N/A	N/A	KC047AR0*RBC
42	0.94	0.426	4,150	18,460	2,510	11,170	11,970	53,250	7,280	32,380	N/A	N/A	N/A	N/A	KD047AR0*RBC
30	2.20	0.998	7,330	32,610	4,610	20,510	21,160	94,120	13,380	59,520	N/A	N/A	N/A	N/A	KF047AR0*RBC
23	4.10	1.860	10,900	48,490	8,060	35,850	31,460	139,940	23,370	103,950	N/A	N/A	N/A	N/A	KG047AR0*RBC
84	0.24	0.109	1,840	8,180	810	3,600	5,310	23,620	2,360	10,500	N/A	N/A	N/A	N/A	KA050AR0*RBC
71	0.38	0.172	2,500	11,120	1,160	5,160	7,210	32,070	3,350	14,900	N/A	N/A	N/A	N/A	KB050AR0*RBC
61	0.58	0.263	3,180	14,150	1,540	6,850	9,170	40,790	4,450	19,790	N/A	N/A	N/A	N/A	KC050AR0*RBC
44	1.00	0.454	4,340	19,310	2,550	11,340	12,540	55,780	7,400	32,920	N/A	N/A	N/A	N/A	KD050AR0*RBC
31	2.30	1.043	7,570	33,670	4,650	20,680	21,870	97,280	13,480	59,960	N/A	N/A	N/A	N/A	KF050AR0*RBC
24	4.30	1.950	11,370	50,580	8,290	36,880	32,830	146,040	24,040	106,940	N/A	N/A	N/A	N/A	KG050AR0*RBC
92	0.25	0.113	2,020	8,990	830	3,690	5,820	25,890	2,410	10,720	N/A	N/A	N/A	N/A	KA055AR0*RBC
78	0.41	0.186	2,740	12,190	1,200	5,340	7,920	35,230	3,480	15,480	N/A	N/A	N/A	N/A	KB055AR0*RBC
66	0.59	0.268	3,440	15,300	1,560	6,940	9,920	44,130	4,540	20,190	N/A	N/A	N/A	N/A	KC055AR0*RBC
48	1.06	0.481	4,740	21,080	2,640	11,740	13,680	60,850	7,660	34,070	N/A	N/A	N/A	N/A	KD055AR0*RBC
34	2.50	1.134	8,310	36,960	4,820	21,440	23,980	106,670	13,980	62,190	N/A	N/A	N/A	N/A	KF055AR0*RBC

Refer to the Engineering section for load and speed limitations.

ANGULAR CONTACT, A-TYPE

THIN SECTION BALL BEARINGS

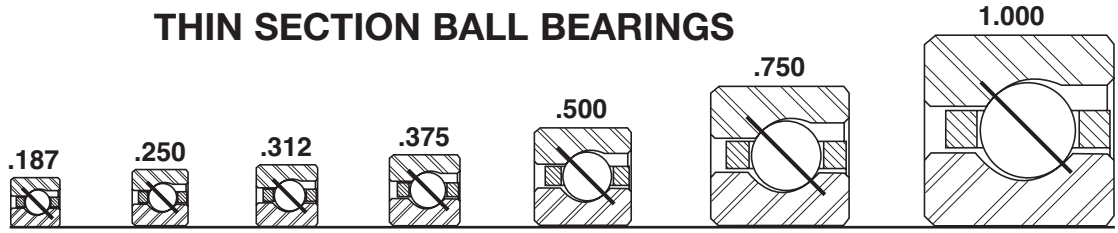

Series:	KAA	KA	KB	KC	KD	KF	KG
Cross Section Size:	3/16"	1/4"	5/16"	3/8"	1/2"	3/4"	1"

PART NUMBER*	NOMINAL DIMENSIONS														
	B Bore		D Outside Diameter		W Width		Land Diameter						f_1 Housing Fillet		Ball Diameter
							L_i -Inner Ring		L_o -Outer Ring		L_s -Counter Bore				
	in.	mm	in.	mm	in.	mm	in.	mm	in.	mm	in.	mm	in.	mm	in.
KG055AR0*RBC	5.5000	139.700	7.5000	190.500	1.0000	25.400	6.250	158.75	6.750	171.45	7.000	177.80	0.080	2.03	1/2
KA060AR0*RBC	6.0000	152.400	6.5000	165.100	0.2500	6.350	6.188	157.18	6.313	160.35	6.375	161.93	0.025	0.64	1/8
KB060AR0*RBC	6.0000	152.400	6.6250	168.275	0.3125	7.938	6.234	158.34	6.391	162.33	6.469	164.31	0.032	0.81	5/32
KC060AR0*RBC	6.0000	152.400	6.7500	171.450	0.3750	9.525	6.281	159.54	6.469	164.31	6.563	166.70	0.040	1.02	3/16
KD060AR0*RBC	6.0000	152.400	7.0000	177.800	0.5000	12.700	6.375	161.93	6.625	168.28	6.750	171.45	0.060	1.52	1/4
KF060AR0*RBC	6.0000	152.400	7.5000	190.500	0.7500	19.050	6.563	166.70	6.938	176.23	7.125	180.98	0.080	2.03	3/8
KG060AR0*RBC	6.0000	152.400	8.0000	203.200	1.0000	25.400	6.750	171.45	7.250	184.15	7.500	190.50	0.080	2.03	1/2
KA065AR0*RBC	6.5000	165.100	7.0000	177.800	0.2500	6.350	6.688	169.88	6.813	173.05	6.875	174.63	0.025	0.64	1/8
KB065AR0*RBC	6.5000	165.100	7.1250	180.975	0.3125	7.938	6.734	171.04	6.891	175.03	6.969	177.01	0.032	0.81	5/32
KC065AR0*RBC	6.5000	165.100	7.2500	184.150	0.3750	9.525	6.781	172.24	6.969	177.01	7.063	179.40	0.040	1.02	3/16
KD065AR0*RBC	6.5000	165.100	7.5000	190.500	0.5000	12.700	6.875	174.63	7.125	180.98	7.250	184.15	0.060	1.52	1/4
KF065AR0*RBC	6.5000	165.100	8.0000	203.200	0.7500	19.050	7.063	179.40	7.438	188.93	7.625	193.68	0.080	2.03	3/8
KG065AR0*RBC	6.5000	165.100	8.5000	215.900	1.0000	25.400	7.250	184.15	7.750	196.85	8.000	203.20	0.080	2.03	1/2
KA070AR0*RBC	7.0000	177.800	7.5000	190.500	0.2500	6.350	7.188	182.58	7.313	185.75	7.375	187.33	0.025	0.64	1/8
KB070AR0*RBC	7.0000	177.800	7.6250	193.675	0.3125	7.938	7.234	183.74	7.391	187.73	7.469	189.71	0.032	0.81	5/32
KC070AR0*RBC	7.0000	177.800	7.7500	196.850	0.3750	9.525	7.281	184.94	7.469	189.71	7.563	192.10	0.040	1.02	3/16
KD070AR0*RBC	7.0000	177.800	8.0000	203.200	0.5000	12.700	7.375	187.33	7.625	193.68	7.750	196.85	0.060	1.52	1/4
KF070AR0*RBC	7.0000	177.800	8.5000	215.900	0.7500	19.050	7.563	192.10	7.938	201.63	8.125	206.38	0.080	2.03	3/8
KG070AR0*RBC	7.0000	177.800	9.0000	228.600	1.0000	25.400	7.750	196.85	8.250	209.55	8.500	215.90	0.080	2.03	1/2
KA075AR0*RBC	7.5000	190.500	8.0000	203.200	0.2500	6.350	7.688	195.28	7.813	198.45	7.875	200.03	0.025	0.64	1/8
KB075AR0*RBC	7.5000	190.500	8.1250	206.375	0.3125	7.938	7.734	196.44	7.891	200.43	7.969	202.41	0.032	0.81	5/32
KC075AR0*RBC	7.5000	190.500	8.2500	209.550	0.3750	9.525	7.781	197.64	7.969	202.41	8.063	204.80	0.040	1.02	3/16
KD075AR0*RBC	7.5000	190.500	8.5000	215.900	0.5000	12.700	7.875	200.03	8.125	206.38	8.250	209.55	0.060	1.52	1/4
KF075AR0*RBC	7.5000	190.500	9.0000	228.600	0.7500	19.050	8.063	204.80	8.438	214.33	8.625	219.08	0.080	2.03	3/8
KG075AR0*RBC	7.5000	190.500	9.5000	241.300	1.0000	25.400	8.250	209.55	8.750	222.25	9.000	228.60	0.080	2.03	1/2
KA080AR0*RBC	8.0000	203.200	8.5000	215.900	0.2500	6.350	8.188	207.98	8.313	211.15	8.375	212.73	0.025	0.64	1/8
KB080AR0*RBC	8.0000	203.200	8.6250	219.075	0.3125	7.938	8.234	209.14	8.391	213.13	8.469	215.11	0.032	0.81	5/32
KC080AR0*RBC	8.0000	203.200	8.7500	222.250	0.3750	9.525	8.281	210.34	8.469	215.11	8.563	217.50	0.040	1.02	3/16
KD080AR0*RBC	8.0000	203.200	9.0000	228.600	0.5000	12.700	8.375	212.73	8.625	219.08	8.750	222.25	0.060	1.52	1/4
KF080AR0*RBC	8.0000	203.200	9.5000	241.300	0.7500	19.050	8.563	217.50	8.938	227.03	9.125	231.78	0.080	2.03	3/8
KG080AR0*RBC	8.0000	203.200	10.0000	254.000	1.0000	25.400	8.750	222.25	9.250	234.95	9.500	241.30	0.080	2.03	1/2
KA090AR0*RBC	9.0000	228.600	9.5000	241.300	0.2500	6.350	9.188	233.38	9.313	236.55	9.375	238.13	0.025	0.64	1/8
KB090AR0*RBC	9.0000	228.600	9.6250	244.475	0.3125	7.938	9.234	234.54	9.391	238.53	9.469	240.51	0.032	0.81	5/32
KC090AR0*RBC	9.0000	228.600	9.7500	247.650	0.3750	9.525	9.281	235.74	9.469	240.51	9.563	242.90	0.040	1.02	3/16
KD090AR0*RBC	9.0000	228.600	10.0000	254.000	0.5000	12.700	9.375	238.13	9.625	244.48	9.750	247.65	0.060	1.52	1/4
KF090AR0*RBC	9.0000	228.600	10.5000	266.700	0.7500	19.050	9.563	242.90	9.938	252.43	10.125	257.18	0.080	2.03	3/8
KG090AR0*RBC	9.0000	228.600	11.0000	279.400	1.0000	25.400	9.750	247.65	10.250	260.35	10.500	266.70	0.080	2.03	1/2
KA100AR0*RBC	10.0000	254.000	10.5000	266.700	0.2500	6.350	10.188	258.78	10.313	261.95	10.375	263.53	0.025	0.64	1/8
KB100AR0*RBC	10.0000	254.000	10.6250	269.875	0.3125	7.938	10.234	259.94	10.391	263.93	10.469	265.91	0.032	0.81	5/32
KC100AR0*RBC	10.0000	254.000	10.7500	273.050	0.3750	9.525	10.281	261.14	10.469	265.91	10.563	268.30	0.040	1.02	3/16
KD100AR0*RBC	10.0000	254.000	11.0000	279.400	0.5000	12.700	10.375	263.53	10.625	269.88	10.750	273.05	0.060	1.52	1/4
KF100AR0*RBC	10.0000	254.000	11.5000	292.100	0.7500	19.050	10.563	268.30	10.938	277.83	11.125	282.58	0.080	2.03	3/8
KG100AR0*RBC	10.0000	254.000	12.0000	304.800	1.0000	25.400	10.750	273.05	11.250	285.75	11.500	292.10	0.080	2.03	1/2

*The alphanumeric identification system is used under license.

- 52100 Steel
- Large Diameter
- Light Weight
- Small Cross Section
- Circular Pocket Ball Separator

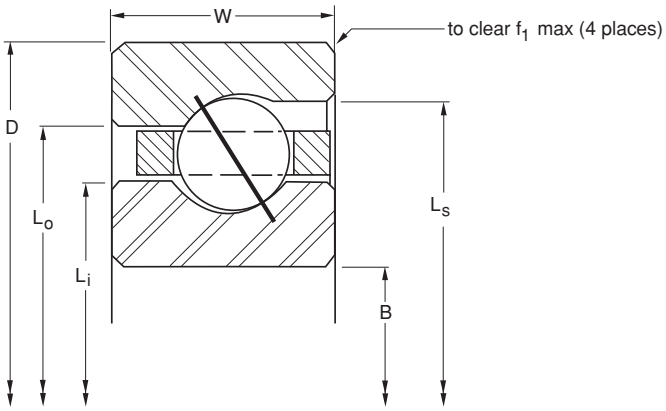

Ball Quantity	Approx. Weight		LOAD RATINGS												PART NUMBER*
			Radial				Thrust				Moment				
			Static		Dynamic		Static		Dynamic		Static		Dynamic		
	lbs.	kg	lbf	N	lbf	N	lbf	N	lbf	N	lbf - in	Nm	lbf - in	Nm	
26	4.70	2.132	12,320	54,800	8,610	38,300	35,570	158,220	24,960	111,030	N/A	N/A	N/A	N/A	KG055AR0*RBC
100	0.28	0.127	2,190	9,740	860	3,830	6,320	28,110	2,500	11,120	N/A	N/A	N/A	N/A	KA060AR0*RBC
85	0.44	0.200	2,990	13,300	1,240	5,520	8,630	38,390	3,600	16,010	N/A	N/A	N/A	N/A	KB060AR0*RBC
72	0.63	0.286	3,750	16,680	1,620	7,210	10,820	48,130	4,690	20,860	N/A	N/A	N/A	N/A	KC060AR0*RBC
52	1.16	0.526	5,130	22,820	2,720	12,100	14,820	65,920	7,880	35,050	N/A	N/A	N/A	N/A	KD060AR0*RBC
37	2.70	1.225	9,040	40,210	5,010	22,290	26,100	116,100	14,530	64,630	N/A	N/A	N/A	N/A	KF060AR0*RBC
28	5.10	2.313	13,270	59,030	8,860	39,410	38,300	170,370	25,700	114,320	N/A	N/A	N/A	N/A	KG060AR0*RBC
108	0.30	0.136	2,370	10,540	890	3,960	6,830	30,380	2,580	11,480	N/A	N/A	N/A	N/A	KA065AR0*RBC
91	0.47	0.213	3,200	14,230	1,260	5,600	9,240	41,100	3,650	16,240	N/A	N/A	N/A	N/A	KB065AR0*RBC
78	0.68	0.308	4,060	18,060	1,670	7,430	11,720	52,130	4,830	21,480	N/A	N/A	N/A	N/A	KC065AR0*RBC
56	1.22	0.553	5,530	24,600	2,780	12,370	15,960	70,990	8,070	35,900	N/A	N/A	N/A	N/A	KD065AR0*RBC
40	2.90	1.315	9,770	43,460	5,140	22,860	28,220	125,530	14,920	66,370	N/A	N/A	N/A	N/A	KF065AR0*RBC
30	5.40	2.449	14,220	63,250	9,110	40,520	41,040	182,560	26,410	117,480	N/A	N/A	N/A	N/A	KG065AR0*RBC
116	0.31	0.141	2,540	11,300	900	4,000	7,340	32,650	2,600	11,570	N/A	N/A	N/A	N/A	KA070AR0*RBC
98	0.50	0.227	3,450	15,350	1,300	5,780	9,960	44,300	3,760	16,730	N/A	N/A	N/A	N/A	KB070AR0*RBC
83	0.73	0.331	4,320	19,220	1,720	7,650	12,470	55,470	4,980	22,150	N/A	N/A	N/A	N/A	KC070AR0*RBC
60	1.31	0.594	5,920	26,330	2,850	12,680	17,100	76,060	8,260	36,740	N/A	N/A	N/A	N/A	KD070AR0*RBC
43	3.20	1.451	10,510	46,750	5,290	23,530	30,330	134,910	15,350	68,280	N/A	N/A	N/A	N/A	KF070AR0*RBC
32	5.80	2.631	15,160	67,440	9,370	41,680	43,780	194,740	27,160	120,810	N/A	N/A	N/A	N/A	KG070AR0*RBC
124	0.34	0.154	2,720	12,100	920	4,090	7,840	34,870	2,660	11,830	N/A	N/A	N/A	N/A	KA075AR0*RBC
105	0.53	0.240	3,700	16,460	1,330	5,920	10,670	47,460	3,860	17,170	N/A	N/A	N/A	N/A	KB075AR0*RBC
89	0.78	0.354	4,630	20,600	1,750	7,780	13,380	59,520	5,090	22,640	N/A	N/A	N/A	N/A	KC075AR0*RBC
64	1.41	0.640	6,320	28,110	2,940	13,080	18,240	81,140	8,520	37,900	N/A	N/A	N/A	N/A	KD075AR0*RBC
45	3.40	1.542	11,000	48,930	5,380	23,930	31,740	141,190	15,590	69,350	N/A	N/A	N/A	N/A	KF075AR0*RBC
34	6.10	2.767	16,110	71,660	9,560	42,530	46,510	206,890	27,710	123,260	N/A	N/A	N/A	N/A	KG075AR0*RBC
132	0.38	0.172	2,890	12,860	960	4,270	8,350	37,140	2,770	12,320	N/A	N/A	N/A	N/A	KA080AR0*RBC
112	0.57	0.259	3,940	17,530	1,360	6,050	11,380	50,620	3,950	17,570	N/A	N/A	N/A	N/A	KB080AR0*RBC
95	0.84	0.381	4,950	22,020	1,800	8,010	14,280	63,520	5,210	23,180	N/A	N/A	N/A	N/A	KC080AR0*RBC
68	1.53	0.694	6,710	29,850	2,990	13,300	19,380	86,210	8,670	38,570	N/A	N/A	N/A	N/A	KD080AR0*RBC
48	3.50	1.588	11,730	52,180	5,520	24,550	33,860	150,620	16,020	71,260	N/A	N/A	N/A	N/A	KF080AR0*RBC
36	6.50	2.948	17,060	75,890	9,800	43,590	49,250	219,070	28,430	126,460	N/A	N/A	N/A	N/A	KG080AR0*RBC
148	0.44	0.200	3,240	14,410	990	4,400	9,360	41,640	2,860	12,720	N/A	N/A	N/A	N/A	KA090AR0*RBC
125	0.66	0.299	4,400	19,570	1,410	6,270	12,700	56,490	4,080	18,150	N/A	N/A	N/A	N/A	KB090AR0*RBC
106	0.94	0.426	5,520	24,550	1,860	8,270	15,930	70,860	5,400	24,020	N/A	N/A	N/A	N/A	KC090AR0*RBC
76	1.72	0.780	7,500	33,360	3,100	13,790	21,660	96,350	9,000	40,030	N/A	N/A	N/A	N/A	KD090AR0*RBC
54	3.90	1.769	13,190	58,670	5,780	25,710	38,090	169,430	16,760	74,550	N/A	N/A	N/A	N/A	KF090AR0*RBC
40	7.20	3.266	18,960	84,340	10,190	45,330	54,720	243,410	29,540	131,400	N/A	N/A	N/A	N/A	KG090AR0*RBC
164	0.50	0.227	3,590	15,970	1,030	4,580	10,370	46,130	3,000	13,340	N/A	N/A	N/A	N/A	KA100AR0*RBC
139	0.73	0.331	4,890	21,750	1,480	6,580	14,120	62,810	4,290	19,080	N/A	N/A	N/A	N/A	KB100AR0*RBC
118	1.06	0.481	6,140	27,310	1,942	8,640	17,730	78,870	5,570	24,780	N/A	N/A	N/A	N/A	KC100AR0*RBC
84	1.88	0.853	8,290	36,880	3,240	14,410	23,940	106,490	9,390	41,770	N/A	N/A	N/A	N/A	KD100AR0*RBC
59	4.30	1.950	14,420	64,140	5,980	26,600	41,620	185,130	17,330	77,090	N/A	N/A	N/A	N/A	KF100AR0*RBC
44	7.90	3.583	20,850	92,750	10,560	46,970	60,190	267,740	30,620	136,200	N/A	N/A	N/A	N/A	KG100AR0*RBC

Refer to the Engineering section for load and speed limitations.

ANGULAR CONTACT, A-TYPE

THIN SECTION BALL BEARINGS

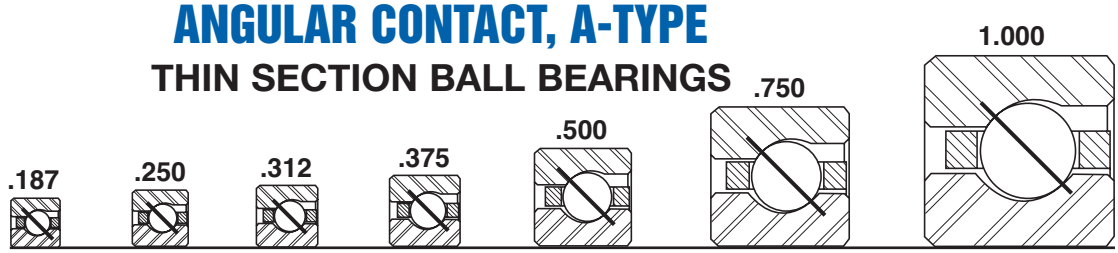

Series:	KAA	KA	KB	KC	KD	KF	KG
Cross Section Size:	3/16"	1/4"	5/16"	3/8"	1/2"	3/4"	1"

PART NUMBER*	NOMINAL DIMENSIONS														
	B Bore		D Outside Diameter		W Width		Land Diameter						f_1 Housing Fillet		Ball Diameter
							L_i -Inner Ring		L_o -Outer Ring		L_s -Counter Bore				
	in.	mm	in.	mm	in.	mm	in.	mm	in.	mm	in.	mm	in.	mm	in.
KA110AR0*RBC	11.0000	279.400	11.5000	292.100	0.2500	6.350	11.188	284.18	11.313	287.35	11.375	288.93	0.025	0.64	1/8
KB110AR0*RBC	11.0000	279.400	11.6250	295.275	0.3125	7.938	11.234	285.34	11.391	289.33	11.469	291.31	0.032	0.81	5/32
KC110AR0*RBC	11.0000	279.400	11.7500	298.450	0.3750	9.525	11.281	286.54	11.469	291.31	11.563	293.70	0.040	1.02	3/16
KD110AR0*RBC	11.0000	279.400	12.0000	304.800	0.5000	12.700	11.375	288.93	11.625	295.28	11.750	298.45	0.060	1.52	1/4
KF110AR0*RBC	11.0000	279.400	12.5000	317.500	0.7500	19.050	11.563	293.70	11.938	303.23	12.125	307.98	0.080	2.03	3/8
KG110AR0*RBC	11.0000	279.400	13.0000	330.200	1.0000	25.400	11.750	298.45	12.250	311.15	12.500	317.50	0.080	2.03	1/2
KA120AR0*RBC	12.0000	304.800	12.5000	317.500	0.2500	6.350	12.188	309.58	12.313	312.75	12.375	314.33	0.025	0.64	1/8
KB120AR0*RBC	12.0000	304.800	12.6250	320.675	0.3125	7.938	12.234	310.74	12.391	314.73	12.469	316.71	0.032	0.81	5/32
KC120AR0*RBC	12.0000	304.800	12.7500	323.850	0.3750	9.525	12.281	311.94	12.469	316.71	12.563	319.10	0.040	1.02	3/16
KD120AR0*RBC	12.0000	304.800	13.0000	330.200	0.5000	12.700	12.375	314.33	12.625	320.68	12.750	323.85	0.060	1.52	1/4
KF120AR0*RBC	12.0000	304.800	13.5000	342.900	0.7500	19.050	12.563	319.10	12.938	328.63	13.125	333.38	0.080	2.03	3/8
KG120AR0*RBC	12.0000	304.800	14.0000	355.600	1.0000	25.400	12.750	323.85	13.250	336.55	13.500	342.90	0.080	2.03	1/2
KB140AR0*RBC	14.0000	355.600	14.6250	371.475	0.3125	7.938	14.234	361.54	14.391	365.53	14.469	367.51	0.032	0.81	5/32
KC140AR0*RBC	14.0000	355.600	14.7500	374.650	0.3750	9.525	14.281	362.74	14.469	367.51	14.563	369.90	0.040	1.02	3/16
KD140AR0*RBC	14.0000	355.600	15.0000	381.000	0.5000	12.700	14.375	365.13	14.625	371.48	14.750	374.65	0.060	1.52	1/4
KF140AR0*RBC	14.0000	355.600	15.5000	393.700	0.7500	19.050	14.563	369.90	14.938	379.43	15.125	384.18	0.080	2.03	3/8
KG140AR0*RBC	14.0000	355.600	16.0000	406.400	1.0000	25.400	14.750	374.65	15.250	387.35	15.500	393.70	0.080	2.03	1/2
KB160AR0*RBC	16.0000	406.400	16.6250	422.275	0.3125	7.938	16.234	412.34	16.391	416.33	16.469	418.31	0.032	0.81	5/32
KC160AR0*RBC	16.0000	406.400	16.7500	425.450	0.3750	9.525	16.281	413.54	16.469	418.31	16.563	420.70	0.040	1.02	3/16
KD160AR0*RBC	16.0000	406.400	17.0000	431.800	0.5000	12.700	16.375	415.93	16.625	422.28	16.750	425.45	0.060	1.52	1/4
KF160AR0*RBC	16.0000	406.400	17.5000	444.500	0.7500	19.050	16.563	420.70	16.938	430.23	17.125	434.98	0.080	2.03	3/8
KG160AR0*RBC	16.0000	406.400	18.0000	457.200	1.0000	25.400	16.750	425.45	17.250	438.15	17.500	444.50	0.080	2.03	1/2
KB180AR0*RBC	18.0000	457.200	18.6250	473.075	0.3125	7.938	18.234	463.14	18.391	467.13	18.469	469.11	0.032	0.81	5/32
KC180AR0*RBC	18.0000	457.200	18.7500	476.250	0.3750	9.525	18.281	464.34	18.469	469.11	18.563	471.50	0.040	1.02	3/16
KD180AR0*RBC	18.0000	457.200	19.0000	482.600	0.5000	12.700	18.375	466.73	18.625	473.08	18.750	476.25	0.060	1.52	1/4
KF180AR0*RBC	18.0000	457.200	19.5000	495.300	0.7500	19.050	18.563	471.50	18.938	481.03	19.125	485.78	0.080	2.03	3/8
KG180AR0*RBC	18.0000	457.200	20.0000	508.000	1.0000	25.400	18.750	476.25	19.250	488.95	19.500	495.30	0.080	2.03	1/2
KB200AR0*RBC	20.0000	508.000	20.6250	523.875	0.3125	7.938	20.234	513.94	20.391	517.93	20.469	519.91	0.032	0.81	5/32
KC200AR0*RBC	20.0000	508.000	20.7500	527.050	0.3750	9.525	20.281	515.14	20.469	519.91	20.563	522.30	0.040	1.02	3/16
KD200AR0*RBC	20.0000	508.000	21.0000	533.400	0.5000	12.700	20.375	517.53	20.625	523.88	20.750	527.05	0.060	1.52	1/4
KF200AR0*RBC	20.0000	508.000	21.5000	546.100	0.7500	19.050	20.563	522.30	20.938	531.83	21.125	536.58	0.080	2.03	3/8
KG200AR0*RBC	20.0000	508.000	22.0000	558.800	1.0000	25.400	20.750	527.05	21.250	539.75	21.500	546.10	0.080	2.03	1/2
KC250AR0*RBC	25.0000	635.000	25.7500	654.050	0.3750	9.525	25.281	642.14	25.469	646.91	25.563	649.30	0.040	1.02	3/16
KD250AR0*RBC	25.0000	635.000	26.0000	660.400	0.5000	12.700	25.375	644.53	25.625	650.88	25.750	654.05	0.060	1.52	1/4
KF250AR0*RBC	25.0000	635.000	26.5000	673.100	0.7500	19.050	25.563	649.30	25.938	658.83	26.125	663.58	0.080	2.03	3/8
KG250AR0*RBC	25.0000	635.000	27.0000	685.800	1.0000	25.400	25.750	654.05	26.250	666.75	26.500	673.10	0.080	2.03	1/2
KG275AR0*RBC	27.5000	698.500	29.5000	749.300	1.0000	25.400	28.243	717.37	28.757	730.43	29.000	736.60	0.080	2.03	1/2
KC300AR0*RBC	30.0000	762.000	30.7500	781.050	0.3750	9.525	30.281	769.14	30.469	773.91	30.563	776.30	0.040	1.02	3/16
KD300AR0*RBC	30.0000	762.000	31.0000	787.400	0.5000	12.700	30.375	771.53	30.625	777.88	30.750	781.05	0.060	1.52	1/4
KF300AR0*RBC	30.0000	762.000	31.5000	800.100	0.7500	19.050	30.563	776.30	30.938	785.83	31.125	790.58	0.080	2.03	3/8
KG300AR0*RBC	30.0000	762.000	32.0000	812.800	1.0000	25.400	30.750	781.05	31.250	793.75	31.500	800.10	0.080	2.03	1/2
KG325AR0*RBC	32.5000	825.500	34.5000	876.300	1.0000	25.400	33.242	844.35	33.758	857.45	34.000	863.60	0.080	2.03	1/2
KF350AR0*RBC	35.0000	889.000	36.5000	927.100	0.7500	19.050	35.563	903.30	35.938	912.83	36.125	917.58	0.080	2.03	3/8
KG350AR0*RBC	35.0000	889.000	37.0000	939.800	1.0000	25.400	35.750	908.05	36.250	920.75	36.500	927.10	0.080	2.03	1/2
KG375AR0*RBC	37.5000	952.500	39.5000	1003.300	1.0000	25.400	38.242	971.35	38.758	984.45	39.000	990.60	0.080	2.03	1/2
KF400AR0*RBC	40.0000	1016.000	41.5000	1054.100	0.7500	19.050	40.563	1030.30	40.938	1039.83	41.125	1044.58	0.080	2.03	3/8
KG400AR0*RBC	40.0000	1016.000	42.0000	1066.800	1.0000	25.400	40.750	1035.05	41.250	1047.75	41.500	1054.10	0.080	2.03	1/2

*The alphanumeric identification system is used under license.

- 52100 Steel
- Large Diameter
- Light Weight
- Small Cross Section
- Circular Pocket Ball Separator

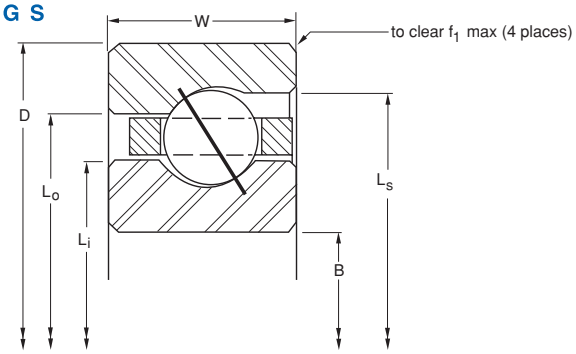

Ball Quantity	Approx. Weight lbs.	Approx. Weight kg	LOAD RATINGS Radial Static lbf	Radial Static N	Radial Dynamic lbf	Radial Dynamic N	Thrust Static lbf	Thrust Static N	Thrust Dynamic lbf	Thrust Dynamic N	Moment Static lbf - in	Moment Static Nm	Moment Dynamic lbf - in	Moment Dynamic Nm	PART NUMBER*
180	0.52	0.236	3,940	17,530	1,072	4,770	11,380	50,620	3,100	13,790	N/A	N/A	N/A	N/A	KA110AR0*RBC
152	0.75	0.340	5,350	23,800	1,540	6,850	15,440	68,680	4,350	19,350	N/A	N/A	N/A	N/A	KB110AR0*RBC
129	1.16	0.526	6,720	29,890	2,047	9,110	19,390	86,250	5,780	25,710	N/A	N/A	N/A	N/A	KC110AR0*RBC
92	2.06	0.934	9,080	40,390	3,310	14,720	26,220	116,630	9,600	42,700	N/A	N/A	N/A	N/A	KD110AR0*RBC
65	4.80	2.177	15,880	70,640	6,227	27,700	45,850	203,950	17,870	79,490	N/A	N/A	N/A	N/A	KF110AR0*RBC
48	8.60	3.901	22,750	101,200	10,920	48,570	65,660	292,070	31,660	140,830	N/A	N/A	N/A	N/A	KG110AR0*RBC
196	0.56	0.254	4,290	19,080	1,128	5,020	12,390	55,110	3,200	14,230	N/A	N/A	N/A	N/A	KA120AR0*RBC
166	0.83	0.376	5,840	25,980	1,623	7,220	16,860	75,000	4,510	20,060	N/A	N/A	N/A	N/A	KB120AR0*RBC
140	1.25	0.567	7,290	32,430	2,147	9,550	21,040	93,590	5,980	26,600	N/A	N/A	N/A	N/A	KC120AR0*RBC
100	2.25	1.021	9,870	43,900	3,430	15,260	28,500	126,770	9,950	44,260	N/A	N/A	N/A	N/A	KD120AR0*RBC
70	5.20	2.359	17,100	76,060	6,487	28,860	49,380	219,650	18,340	81,580	N/A	N/A	N/A	N/A	KF120AR0*RBC
52	9.30	4.218	24,640	109,600	11,230	49,950	71,140	316,450	32,570	144,880	N/A	N/A	N/A	N/A	KG120AR0*RBC
192	1.05	0.476	6,760	30,070	1,767	7,860	19,500	86,740	4,840	21,530	N/A	N/A	N/A	N/A	KB140AR0*RBC
163	1.52	0.689	8,490	37,770	2,347	10,440	24,500	108,980	6,330	28,160	N/A	N/A	N/A	N/A	KC140AR0*RBC
116	2.73	1.238	11,450	50,930	3,582	15,930	33,060	147,060	10,340	45,990	N/A	N/A	N/A	N/A	KD140AR0*RBC
81	6.00	2.722	19,790	88,030	7,043	31,330	57,140	254,170	19,490	86,700	N/A	N/A	N/A	N/A	KF140AR0*RBC
60	10.80	4.899	28,430	126,460	11,770	52,360	82,080	365,110	34,150	151,910	N/A	N/A	N/A	N/A	KG140AR0*RBC
219	1.20	0.544	7,710	34,300	1,907	8,480	22,250	98,970	5,150	22,910	N/A	N/A	N/A	N/A	KB160AR0*RBC
186	1.73	0.785	9,680	43,060	2,533	11,270	27,950	124,330	6,730	29,940	N/A	N/A	N/A	N/A	KC160AR0*RBC
132	3.10	1.406	13,030	57,960	3,856	17,150	37,620	167,340	11,030	49,060	N/A	N/A	N/A	N/A	KD160AR0*RBC
92	7.10	3.221	22,480	100,000	7,563	33,640	64,890	288,650	20,310	90,340	N/A	N/A	N/A	N/A	KF160AR0*RBC
68	12.30	5.579	32,220	143,320	12,360	54,980	93,020	413,770	35,850	159,470	N/A	N/A	N/A	N/A	KG160AR0*RBC
246	1.35	0.612	8,660	38,520	2,038	9,070	24,990	111,160	5,510	24,510	N/A	N/A	N/A	N/A	KB180AR0*RBC
209	1.94	0.880	10,880	48,400	2,707	12,040	31,410	139,720	7,280	32,380	N/A	N/A	N/A	N/A	KC180AR0*RBC
148	3.48	1.579	14,610	64,990	4,113	18,300	42,180	187,630	11,390	50,670	N/A	N/A	N/A	N/A	KD180AR0*RBC
104	7.90	3.583	25,410	113,030	8,103	36,040	73,360	326,320	21,210	94,350	N/A	N/A	N/A	N/A	KF180AR0*RBC
76	13.70	6.214	36,020	160,220	12,898	57,370	104,000	462,620	37,230	165,610	N/A	N/A	N/A	N/A	KG180AR0*RBC
273	1.50	0.680	9,610	42,750	2,162	9,620	27,730	123,350	5,900	26,240	N/A	N/A	N/A	N/A	KB200AR0*RBC
231	2.16	0.980	12,030	53,510	2,863	12,740	34,720	154,440	7,780	34,610	N/A	N/A	N/A	N/A	KC200AR0*RBC
164	3.85	1.746	16,190	72,020	4,356	19,380	46,740	207,910	11,920	53,020	N/A	N/A	N/A	N/A	KD200AR0*RBC
115	8.90	4.037	28,100	125,000	8,562	38,090	81,120	360,840	22,680	100,890	N/A	N/A	N/A	N/A	KF200AR0*RBC
84	15.80	7.167	39,810	177,080	13,612	60,550	114,900	511,100	38,830	172,720	N/A	N/A	N/A	N/A	KG200AR0*RBC
288	2.69	1.220	14,900	66,280	3,233	14,380	43,280	192,520	9,010	40,080	N/A	N/A	N/A	N/A	KC250AR0*RBC
204	4.79	2.173	20,140	89,590	4,908	21,830	58,140	258,620	13,540	60,230	N/A	N/A	N/A	N/A	KD250AR0*RBC
142	10.90	4.944	34,700	154,350	9,585	42,640	100,200	445,710	26,100	116,100	N/A	N/A	N/A	N/A	KF250AR0*RBC
104	19.50	8.845	49,280	219,210	15,239	67,790	142,300	632,980	41,420	184,250	N/A	N/A	N/A	N/A	KG250AR0*RBC
114	21.50	9.761	54,020	240,293	15,963	71,007	15,590	69,348	43,720	194,476	N/A	N/A	N/A	N/A	KG275AR0*RBC
345	3.21	1.456	17,960	79,890	3,561	15,840	51,850	230,640	10,160	45,190	N/A	N/A	N/A	N/A	KC300AR0*RBC
244	5.73	2.599	24,090	107,160	5,397	24,010	69,540	309,330	15,260	67,880	N/A	N/A	N/A	N/A	KD300AR0*RBC
170	13.00	5.897	41,540	184,780	10,533	46,850	119,900	533,340	29,430	130,910	N/A	N/A	N/A	N/A	KF300AR0*RBC
124	23.30	10.569	58,760	261,380	16,687	74,230	169,600	754,420	46,020	204,710	N/A	N/A	N/A	N/A	KG300AR0*RBC
134	25.20	11.441	63,500	282,462	17,335	77,100	183,300	815,539	48,430	215,427	N/A	N/A	N/A	N/A	KG325AR0*RBC
198	15.10	6.849	48,380	215,200	11,382	50,630	139,700	621,420	32,580	144,920	N/A	N/A	N/A	N/A	KF350AR0*RBC
144	27.10	12.292	68,240	303,550	17,982	79,990	197,000	876,300	50,840	226,150	N/A	N/A	N/A	N/A	KG350AR0*RBC
154	29.00	13.166	72,980	324,631	18,568	82,595	210,700	937,240	53,140	236,379	N/A	N/A	N/A	N/A	KG375AR0*RBC
226	17.20	7.802	55,220	245,630	12,147	54,030	159,400	709,050	35,580	158,270	N/A	N/A	N/A	N/A	KF400AR0*RBC
164	30.80	13.971	77,720	345,720	19,153	85,200	224,400	998,180	55,440	246,610	N/A	N/A	N/A	N/A	KG400AR0*RBC

Refer to the Engineering section for load and speed limitations.

4-POINT CONTACT, X-TYPE

THIN SECTION BALL BEARINGS

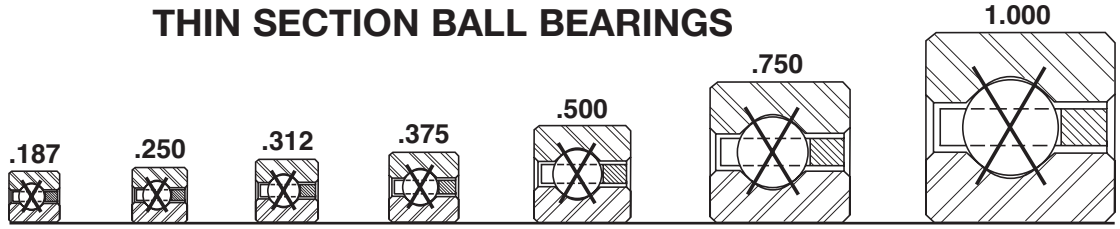

Series:	KAA	KA	KB	KC	KD	KF	KG
Cross Section Size:	3/16"	1/4"	5/16"	3/8"	1/2"	3/4"	1"

PART NUMBER*	NOMINAL DIMENSIONS												
	B Bore		D Outside Diameter		W Width		Land Diameter L_i -Inner Ring		Land Diameter L_o -Outer Ring		f_1 Housing Fillet		Ball Diameter
	in.	mm	in.	mm	in.	mm	in.	mm	in.	mm	in.	mm	in.
KAA10XL0*RBC	1.0000	25.400	1.3750	34.925	0.1875	4.763	1.141	28.98	1.234	31.34	0.015	0.38	3/32
KAA15XL0*RBC	1.5000	38.100	1.8750	47.625	0.1875	4.763	1.641	41.68	1.734	44.04	0.015	0.38	3/32
KAA17XL0*RBC	1.7500	44.450	2.1250	53.975	0.1875	4.763	1.890	48.01	1.985	50.42	0.015	0.38	3/32
KA020XP0*RBC	2.0000	50.800	2.5000	63.500	0.2500	6.350	2.188	55.58	2.313	58.75	0.025	0.64	1/8
KB020XP0*RBC	2.0000	50.800	2.6250	66.675	0.3125	7.938	2.234	56.74	2.391	60.73	0.032	0.81	5/32
KA025XP0*RBC	2.5000	63.500	3.0000	76.200	0.2500	6.350	2.688	68.28	2.813	71.45	0.025	0.64	1/8
KB025XP0*RBC	2.5000	63.500	3.1250	79.375	0.3125	7.938	2.734	69.44	2.891	73.43	0.040	1.02	5/32
KA030XP0*RBC	3.0000	76.200	3.5000	88.900	0.2500	6.350	3.188	80.98	3.313	84.15	0.025	0.64	1/8
KB030XP0*RBC	3.0000	76.200	3.6250	92.075	0.3125	7.938	3.234	82.14	3.391	86.13	0.032	0.81	5/32
KA035XP0*RBC	3.5000	88.900	4.0000	101.600	0.2500	6.350	3.688	93.68	3.813	96.85	0.025	0.64	1/8
KB035XP0*RBC	3.5000	88.900	4.1250	104.775	0.3125	7.938	3.734	94.84	3.891	98.83	0.032	0.81	5/32
KA040XP0*RBC	4.0000	101.600	4.5000	114.300	0.2500	6.350	4.188	106.38	4.313	109.55	0.025	0.64	1/8
KB040XP0*RBC	4.0000	101.600	4.6250	117.475	0.3125	7.938	4.234	107.54	4.391	111.53	0.032	0.81	5/32
KC040XP0*RBC	4.0000	101.600	4.7500	120.650	0.3750	9.525	4.281	108.74	4.469	113.51	0.040	1.02	3/16
KD040XP0*RBC	4.0000	101.600	5.0000	127.000	0.5000	12.700	4.375	111.13	4.625	117.48	0.060	1.52	1/4
KF040XP0*RBC	4.0000	101.600	5.5000	139.700	0.7500	19.050	4.563	115.90	4.938	125.43	0.080	2.03	3/8
KG040XP0*RBC	4.0000	101.600	6.0000	152.400	1.0000	25.400	4.750	120.65	5.250	133.35	0.080	2.03	1/2
KA042XP0*RBC	4.2500	107.950	4.7500	120.650	0.2500	6.350	4.438	112.73	4.563	115.90	0.025	0.64	1/8
KB042XP0*RBC	4.2500	107.950	4.8750	123.825	0.3125	7.938	4.484	113.89	4.641	117.88	0.032	0.81	5/32
KC042XP0*RBC	4.2500	107.950	5.0000	127.000	0.3750	9.525	4.531	115.09	4.719	119.86	0.040	1.02	3/16
KD042XP0*RBC	4.2500	107.950	5.2500	133.350	0.5000	12.700	4.625	117.48	4.875	123.83	0.060	1.52	1/4
KF042XP0*RBC	4.2500	107.950	5.7500	146.050	0.7500	19.050	4.813	122.25	5.188	131.78	0.080	2.03	3/8
KG042XP0*RBC	4.2500	107.950	6.2500	158.750	1.0000	25.400	5.000	127.00	5.500	139.70	0.080	2.03	1/2
KA045XP0*RBC	4.5000	114.300	5.0000	127.000	0.2500	6.350	4.688	119.08	4.813	122.25	0.025	0.64	1/8
KB045XP0*RBC	4.5000	114.300	5.1250	130.175	0.3125	7.938	4.734	120.24	4.891	124.23	0.032	0.81	5/32
KC045XP0*RBC	4.5000	114.300	5.2500	133.350	0.3750	9.525	4.781	121.44	4.969	126.21	0.040	1.02	3/16
KD045XP0*RBC	4.5000	114.300	5.5000	139.700	0.5000	12.700	4.875	123.83	5.125	130.18	0.060	1.52	1/4
KF045XP0*RBC	4.5000	114.300	6.0000	152.400	0.7500	19.050	5.063	128.60	5.438	138.13	0.080	2.03	3/8
KG045XP0*RBC	4.5000	114.300	6.5000	165.100	1.0000	25.400	5.250	133.35	5.750	146.05	0.080	2.03	1/2
KA047XP0*RBC	4.7500	120.650	5.2500	133.350	0.2500	6.350	4.938	125.43	5.063	128.60	0.025	0.64	1/8
KB047XP0*RBC	4.7500	120.650	5.3750	136.525	0.3125	7.938	4.984	126.59	5.141	130.58	0.032	0.81	5/32
KC047XP0*RBC	4.7500	120.650	5.5000	139.700	0.3750	9.525	5.031	127.79	5.219	132.56	0.040	1.02	3/16
KD047XP0*RBC	4.7500	120.650	5.7500	146.050	0.5000	12.700	5.125	130.18	5.375	136.53	0.060	1.52	1/4
KF047XP0*RBC	4.7500	120.650	6.2500	158.750	0.7500	19.050	5.313	134.95	5.688	144.48	0.080	2.03	3/8
KG047XP0*RBC	4.7500	120.650	6.7500	171.450	1.0000	25.400	5.500	139.70	6.000	152.40	0.080	2.03	1/2
KA050XP0*RBC	5.0000	127.000	5.5000	139.700	0.2500	6.350	5.188	131.78	5.313	134.95	0.025	0.64	1/8
KB050XP0*RBC	5.0000	127.000	5.6250	142.875	0.3125	7.938	5.234	132.94	5.391	136.93	0.032	0.81	5/32
KC050XP0*RBC	5.0000	127.000	5.7500	146.050	0.3750	9.525	5.281	134.14	5.469	138.91	0.040	1.02	3/16
KD050XP0*RBC	5.0000	127.000	6.0000	152.400	0.5000	12.700	5.375	136.53	5.625	142.88	0.060	1.52	1/4
KF050XP0*RBC	5.0000	127.000	6.5000	165.100	0.7500	19.050	5.563	141.30	5.938	150.83	0.080	2.03	3/8
KG050XP0*RBC	5.0000	127.000	7.0000	177.800	1.0000	25.400	5.750	146.05	6.250	158.75	0.080	2.03	1/2
KA055XP0*RBC	5.5000	139.700	6.0000	152.400	0.2500	6.350	5.688	144.48	5.813	147.65	0.025	0.64	1/8
KB055XP0*RBC	5.5000	139.700	6.1250	155.575	0.3125	7.938	5.734	145.64	5.891	149.63	0.032	0.81	5/32
KC055XP0*RBC	5.5000	139.700	6.2500	158.750	0.3750	9.525	5.781	146.84	5.969	151.61	0.040	1.02	3/16
KD055XP0*RBC	5.5000	139.700	6.5000	165.100	0.5000	12.700	5.875	149.23	6.125	155.58	0.060	1.52	1/4
KF055XP0*RBC	5.5000	139.700	7.0000	177.800	0.7500	19.050	6.063	154.00	6.438	163.53	0.080	2.03	3/8

*The alphanumeric identification system is used under license.

- 52100 Steel
- Large Diameter
- Light Weight
- Small Cross Section
- Snap-Over Ball Separator

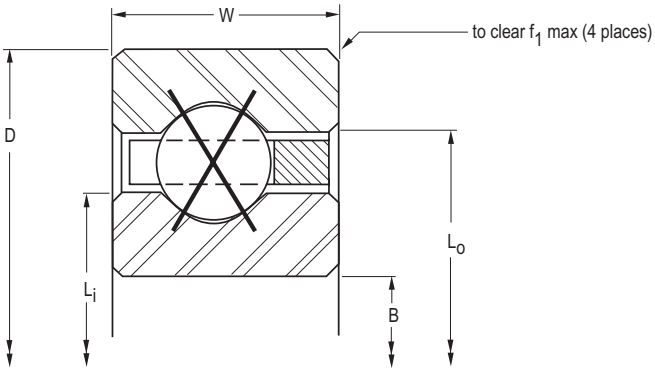

Ball Quantity	Approx. Weight		LOAD RATINGS												PART NUMBER*
			Radial				Thrust				Moment				
			Static		Dynamic		Static		Dynamic		Static		Dynamic		
	lbs.	kg	lbf	N	lbf	N	lbf	N	lbf	N	lbf - in	Nm	lbf - in	Nm	
22	0.03	0.014	290	1,290	270	1,200	730	3,250	680	3,020	170	20	160	20	KAA10XL0*RBC
30	0.04	0.018	400	1,780	310	1,380	1,000	4,450	770	3,430	340	40	260	30	KAA15XL0*RBC
33	0.06	0.027	460	2,050	322	1,430	1,140	5,070	805	3,580	440	50	328	37	KAA17XL0*RBC
27	0.10	0.045	680	3,020	514	2,290	1,710	7,610	1,230	5,470	770	90	550	60	KA020XP0*RBC
23	0.16	0.073	930	4,140	758	3,370	2,340	10,410	1,740	7,740	1,080	120	800	90	KB020XP0*RBC
33	0.13	0.059	830	3,690	583	2,590	2,090	9,300	1,320	5,870	1,150	130	730	80	KA025XP0*RBC
28	0.20	0.091	1,140	5,070	848	3,770	2,840	12,630	1,880	8,360	1,600	180	1,060	120	KB025XP0*RBC
39	0.15	0.068	990	4,400	643	2,860	2,470	10,990	1,410	6,270	1,600	180	920	100	KA030XP0*RBC
33	0.24	0.109	1,340	5,960	933	4,150	3,350	14,900	1,990	8,850	2,220	250	1,320	150	KB030XP0*RBC
45	0.18	0.082	1,140	5,070	701	3,120	2,850	12,680	1,480	6,580	2,130	240	1,110	130	KA035XP0*RBC
38	0.27	0.122	1,540	6,850	1,014	4,510	3,860	17,170	2,100	9,340	2,940	330	1,600	180	KB035XP0*RBC
51	0.19	0.086	1,290	5,740	756	3,360	3,220	14,320	1,550	6,890	2,740	310	1,320	150	KA040XP0*RBC
43	0.30	0.136	1,750	7,780	1,091	4,850	4,370	19,440	2,210	9,830	3,770	430	1,900	210	KB040XP0*RBC
35	0.45	0.204	2,100	9,340	1,417	6,300	5,260	23,400	2,810	12,500	4,600	520	2,460	280	KC040XP0*RBC
27	0.78	0.354	3,080	13,700	2,311	10,280	7,700	34,250	4,890	21,750	6,930	780	4,400	500	KD040XP0*RBC
19	1.90	0.862	5,360	23,840	4,665	20,750	13,400	59,610	8,830	39,280	12,730	1,440	8,390	950	KF040XP0*RBC
15	3.60	1.633	8,210	36,520	7,979	35,490	20,520	91,280	15,150	67,390	20,520	2,320	15,150	1,710	KG040XP0*RBC
54	0.20	0.091	1,370	6,090	783	3,480	3,410	15,170	1,590	7,070	3,070	350	1,430	160	KA042XP0*RBC
45	0.31	0.141	1,830	8,140	1,120	4,980	4,570	20,330	2,230	9,920	4,170	470	2,040	230	KB042XP0*RBC
37	0.47	0.213	2,220	9,880	1,464	6,510	5,560	24,730	2,870	12,770	5,140	580	2,650	300	KC042XP0*RBC
28	0.83	0.376	3,190	14,190	2,355	10,480	7,980	35,500	4,920	21,890	7,580	860	4,670	530	KD042XP0*RBC
20	2.00	0.907	5,640	25,090	4,795	21,330	14,110	62,760	8,990	39,990	14,110	1,590	8,993	1,020	KF042XP0*RBC
15	3.80	1.724	8,210	36,520	7,917	35,220	20,520	91,280	15,150	67,390	21,550	2,430	15,910	1,800	KG042XP0*RBC
57	0.22	0.100	1,440	6,410	809	3,600	3,600	16,010	1,610	7,160	3,420	390	1,530	170	KA045XP0*RBC
48	0.33	0.150	1,950	8,670	1,165	5,180	4,880	21,710	2,300	10,230	4,690	530	2,220	250	KB045XP0*RBC
39	0.48	0.218	2,340	10,410	1,510	6,720	5,860	26,070	2,920	12,990	5,710	650	2,850	320	KC045XP0*RBC
30	0.88	0.399	3,420	15,210	2,454	10,920	8,550	38,030	5,080	22,600	8,550	970	5,080	570	KD045XP0*RBC
21	2.10	0.953	5,930	26,380	4,923	21,900	14,810	65,880	9,180	40,830	15,550	1,760	9,695	1,100	KF045XP0*RBC
16	4.00	1.814	8,760	38,970	8,205	36,500	21,890	97,370	15,820	70,370	24,080	2,720	17,400	1,970	KG045XP0*RBC
60	0.23	0.104	1,520	6,760	834	3,710	3,790	16,860	1,650	7,340	3,790	430	1,650	190	KA047XP0*RBC
50	0.34	0.154	2,030	9,030	1,193	5,310	5,080	22,600	2,310	10,280	5,140	580	2,340	260	KB047XP0*RBC
41	0.50	0.227	2,460	10,940	1,556	6,920	6,160	27,400	2,970	13,210	6,320	710	3,040	340	KC047XP0*RBC
31	0.94	0.426	3,530	15,700	2,496	11,100	8,840	39,320	5,130	22,820	9,280	1,050	5,380	610	KD047XP0*RBC
22	2.20	0.998	6,210	27,620	5,048	22,450	15,520	69,040	9,380	41,720	17,070	1,930	10,416	1,180	KF047XP0*RBC
17	4.10	1.860	9,300	41,370	8,487	37,750	23,260	103,470	16,470	73,260	26,740	3,020	18,940	2,140	KG047XP0*RBC
63	0.24	0.109	1,590	7,070	859	3,820	3,980	17,700	1,680	7,470	4,180	470	1,760	200	KA050XP0*RBC
53	0.38	0.172	2,150	9,560	1,236	5,500	5,380	23,930	2,380	10,590	5,720	650	2,520	280	KB050XP0*RBC
43	0.58	0.263	2,590	11,520	1,600	7,120	6,460	28,740	3,040	13,520	6,950	790	3,270	370	KC050XP0*RBC
33	1.00	0.454	3,760	16,730	2,592	11,530	9,410	41,860	5,270	23,440	10,350	1,170	5,800	660	KD050XP0*RBC
23	2.30	1.043	6,490	28,870	5,172	23,010	16,220	72,150	9,520	42,350	18,660	2,110	11,157	1,260	KF050XP0*RBC
18	4.30	1.950	9,850	43,810	8,762	38,980	24,620	109,520	17,110	76,110	29,550	3,340	20,530	2,320	KG050XP0*RBC
69	0.25	0.113	1,750	7,780	908	4,040	4,360	19,390	1,720	7,650	5,020	570	1,970	220	KA055XP0*RBC
58	0.41	0.186	2,360	10,500	1,304	5,800	5,890	26,200	2,460	10,940	6,850	770	2,860	320	KB055XP0*RBC
47	0.59	0.268	2,830	12,590	1,687	7,500	7,060	31,400	3,120	13,880	8,300	940	3,717	420	KC055XP0*RBC
36	1.06	0.481	4,100	18,240	2,725	12,120	10,260	45,640	5,450	24,240	12,310	1,390	6,540	740	KD055XP0*RBC
25	2.50	1.134	7,050	31,360	5,415	24,090	17,630	78,420	9,820	43,680	22,040	2,490	12,696	1,430	KF055XP0*RBC

Refer to the Engineering section for load and speed limitations.

4-POINT CONTACT, X-TYPE

THIN SECTION BALL BEARINGS

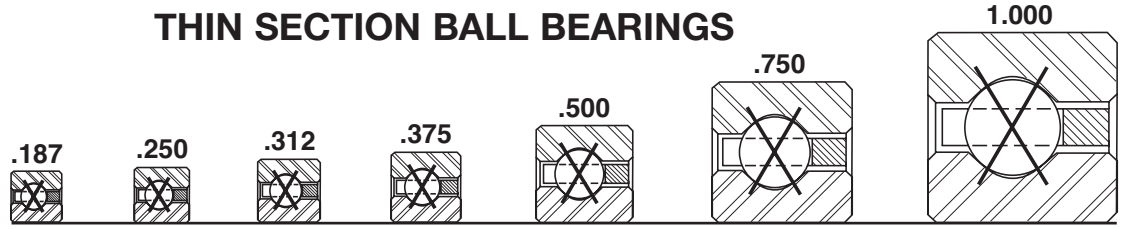

Series:	KAA	KA	KB	KC	KD	KF	KG
Cross Section Size:	3/16"	1/4"	5/16"	3/8"	1/2"	3/4"	1"

PART NUMBER*	NOMINAL DIMENSIONS												
	B Bore		D Outside Diameter		W Width		Land Diameter L_i -Inner Ring		Land Diameter L_o -Outer Ring		f_1 Housing Fillet		Ball Diameter
	in.	mm	in.	mm	in.	mm	in.	mm	in.	mm	in.	mm	in.
KG055XP0*RBC	5.5000	139.700	7.5000	190.500	1.0000	25.400	6.250	158.75	6.750	171.45	0.080	2.03	1/2
KA060XP0*RBC	6.0000	152.400	6.5000	165.100	0.2500	6.350	6.188	157.18	6.313	160.35	0.025	0.64	1/8
KB060XP0*RBC	6.0000	152.400	6.6250	168.275	0.3125	7.938	6.234	158.34	6.391	162.33	0.032	0.81	5/32
KC060XP0*RBC	6.0000	152.400	6.7500	171.450	0.3750	9.525	6.281	159.54	6.469	164.31	0.040	1.02	3/16
KD060XP0*RBC	6.0000	152.400	7.0000	177.800	0.5000	12.700	6.375	161.93	6.625	168.28	0.060	1.52	1/4
KF060XP0*RBC	6.0000	152.400	7.5000	190.500	0.7500	19.050	6.563	166.70	6.938	176.23	0.080	2.03	3/8
KG060XP0*RBC	6.0000	152.400	8.0000	203.200	1.0000	25.400	6.750	171.45	7.250	184.15	0.080	2.03	1/2
KA065XP0*RBC	6.5000	165.100	7.0000	177.800	0.2500	6.350	6.688	169.88	6.813	173.05	0.025	0.64	1/8
KB065XP0*RBC	6.5000	165.100	7.1250	180.975	0.3125	7.938	6.734	171.04	6.891	175.03	0.032	0.81	5/32
KC065XP0*RBC	6.5000	165.100	7.2500	184.150	0.3750	9.525	6.781	172.24	6.969	177.01	0.040	1.02	3/16
KD065XP0*RBC	6.5000	165.100	7.5000	190.500	0.5000	12.700	6.875	174.63	7.125	180.98	0.060	1.52	1/4
KF065XP0*RBC	6.5000	165.100	8.0000	203.200	0.7500	19.050	7.063	179.40	7.438	188.93	0.080	2.03	3/8
KG065XP0*RBC	6.5000	165.100	8.5000	215.900	1.0000	25.400	7.250	184.15	7.750	196.85	0.080	2.03	1/2
KA070XP0*RBC	7.0000	177.800	7.5000	190.500	0.2500	6.350	7.188	182.58	7.313	185.75	0.025	0.64	1/8
KB070XP0*RBC	7.0000	177.800	7.6250	193.675	0.3125	7.938	7.234	183.74	7.391	187.73	0.032	0.81	5/32
KC070XP0*RBC	7.0000	177.800	7.7500	196.850	0.3750	9.525	7.281	184.94	7.469	189.71	0.040	1.02	3/16
KD070XP0*RBC	7.0000	177.800	8.0000	203.200	0.5000	12.700	7.375	187.33	7.625	193.68	0.060	1.52	1/4
KF070XP0*RBC	7.0000	177.800	8.5000	215.900	0.7500	19.050	7.563	192.10	7.938	201.63	0.080	2.03	3/8
KG070XP0*RBC	7.0000	177.800	9.0000	228.600	1.0000	25.400	7.750	196.85	8.250	209.55	0.080	2.03	1/2
KA075XP0*RBC	7.5000	190.500	8.0000	203.200	0.2500	6.350	7.688	195.28	7.813	198.45	0.025	0.64	1/8
KB075XP0*RBC	7.5000	190.500	8.1250	206.375	0.3125	7.938	7.734	196.44	7.891	200.43	0.032	0.81	5/32
KC075XP0*RBC	7.5000	190.500	8.2500	209.550	0.3750	9.525	7.781	197.64	7.969	202.41	0.040	1.02	3/16
KD075XP0*RBC	7.5000	190.500	8.5000	215.900	0.5000	12.700	7.875	200.03	8.125	206.38	0.060	1.52	1/4
KF075XP0*RBC	7.5000	190.500	9.0000	228.600	0.7500	19.050	8.063	204.80	8.438	214.33	0.080	2.03	3/8
KG075XP0*RBC	7.5000	190.500	9.5000	241.300	1.0000	25.400	8.250	209.55	8.750	222.25	0.080	2.03	1/2
KA080XP0*RBC	8.0000	203.200	8.5000	215.900	0.2500	6.350	8.188	207.98	8.313	211.15	0.025	0.64	1/8
KB080XP0*RBC	8.0000	203.200	8.6250	219.075	0.3125	7.938	8.234	209.14	8.391	213.13	0.032	0.81	5/32
KC080XP0*RBC	8.0000	203.200	8.7500	222.250	0.3750	9.525	8.281	210.34	8.469	215.11	0.040	1.02	3/16
KD080XP0*RBC	8.0000	203.200	9.0000	228.600	0.5000	12.700	8.375	212.73	8.625	219.08	0.060	1.52	1/4
KF080XP0*RBC	8.0000	203.200	9.5000	241.300	0.7500	19.050	8.563	217.50	8.938	227.03	0.080	2.03	3/8
KG080XP0*RBC	8.0000	203.200	10.0000	254.000	1.0000	25.400	8.750	222.25	9.250	234.95	0.080	2.03	1/2
KA090XP0*RBC	9.0000	228.600	9.5000	241.300	0.2500	6.350	9.188	233.38	9.313	236.55	0.025	0.64	1/8
KB090XP0*RBC	9.0000	228.600	9.6250	244.475	0.3125	7.938	9.234	234.54	9.391	238.53	0.032	0.81	5/32
KC090XP0*RBC	9.0000	228.600	9.7500	247.650	0.3750	9.525	9.281	235.74	9.469	240.51	0.040	1.02	3/16
KD090XP0*RBC	9.0000	228.600	10.0000	254.000	0.5000	12.700	9.375	238.13	9.625	244.48	0.060	1.52	1/4
KF090XP0*RBC	9.0000	228.600	10.5000	266.700	0.7500	19.050	9.563	242.90	9.938	252.43	0.080	2.03	3/8
KG090XP0*RBC	9.0000	228.600	11.0000	279.400	1.0000	25.400	9.750	247.65	10.250	260.35	0.080	2.03	1/2
KA100XP0*RBC	10.0000	254.000	10.5000	266.700	0.2500	6.350	10.188	258.78	10.313	261.95	0.025	0.64	1/8
KB100XP0*RBC	10.0000	254.000	10.6250	269.875	0.3125	7.938	10.234	259.94	10.391	263.93	0.032	0.81	5/32
KC100XP0*RBC	10.0000	254.000	10.7500	273.050	0.3750	9.525	10.281	261.14	10.469	265.91	0.040	1.02	3/16
KD100XP0*RBC	10.0000	254.000	11.0000	279.400	0.5000	12.700	10.375	263.53	10.625	269.88	0.060	1.52	1/4
KF100XP0*RBC	10.0000	254.000	11.5000	292.100	0.7500	19.050	10.563	268.30	10.938	277.83	0.080	2.03	3/8
KG100XP0*RBC	10.0000	254.000	12.0000	304.800	1.0000	25.400	10.750	273.05	11.250	285.75	0.080	2.03	1/2

*The alphanumeric identification system is used under license.

- 52100 Steel
- Large Diameter
- Light Weight
- Small Cross Section
- Snap-Over Ball Separator

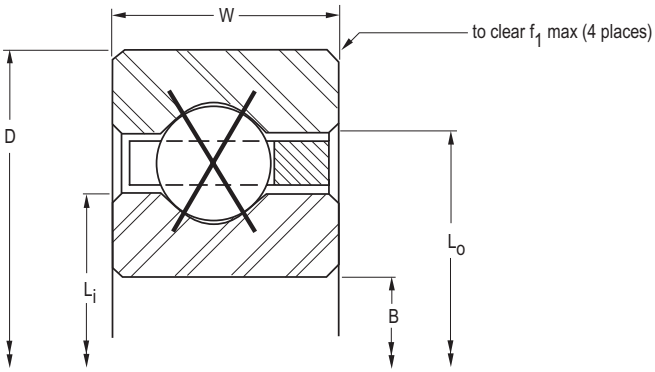

Ball Quantity	Approx. Weight		LOAD RATINGS												PART NUMBER*
			Radial				Thrust				Moment				
			Static		Dynamic		Static		Dynamic		Static		Dynamic		
	lbs.	kg	lbf	N	lbf	N	lbf	N	lbf	N	lbf - in	Nm	lbf - in	Nm	
19	4.70	2.132	10,400	46,260	8,979	39,940	25,990	115,610	17,460	77,670	33,790	3,820	22,700	2,560	KG055XP0*RBC
75	0.28	0.127	1,900	8,450	955	4,250	4,740	21,080	1,780	7,920	5,930	670	2,240	250	KA060XP0*RBC
63	0.44	0.200	2,560	11,390	1,371	6,100	6,400	28,470	2,540	11,300	8,080	910	3,247	370	KB060XP0*RBC
51	0.63	0.286	3,070	13,660	1,770	7,870	7,660	34,070	3,220	14,320	9,770	1,100	4,234	480	KC060XP0*RBC
39	1.16	0.526	4,450	19,790	2,855	12,700	11,120	49,460	5,610	24,950	14,450	1,630	7,290	820	KD060XP0*RBC
27	2.70	1.225	7,620	33,900	5,651	25,140	19,050	84,740	10,150	45,150	25,710	2,900	14,311	1,620	KF060XP0*RBC
21	5.10	2.313	11,490	51,110	9,503	42,270	28,730	127,800	18,290	81,360	40,220	4,540	25,610	2,890	KG060XP0*RBC
81	0.30	0.136	2,050	9,120	1,001	4,450	5,120	22,770	1,840	8,180	6,910	780	2,535	290	KA065XP0*RBC
68	0.47	0.213	2,760	12,280	1,435	6,380	6,910	30,740	2,590	11,520	9,410	1,060	3,668	410	KB065XP0*RBC
55	0.68	0.308	3,310	14,720	1,851	8,230	8,270	36,790	3,300	14,680	11,370	1,280	4,775	540	KC065XP0*RBC
42	1.22	0.553	4,790	21,310	2,980	13,260	11,970	53,250	5,740	25,530	16,760	1,890	8,040	910	KD065XP0*RBC
29	2.90	1.315	8,180	36,390	5,880	26,160	20,460	91,010	10,380	46,170	29,660	3,350	15,993	1,810	KF065XP0*RBC
22	5.40	2.449	12,040	53,560	9,713	43,210	30,100	133,890	18,520	82,380	45,140	5,100	27,770	3,140	KG065XP0*RBC
87	0.31	0.141	2,200	9,790	1,046	4,650	5,500	24,470	1,850	8,230	7,980	900	2,844	320	KA070XP0*RBC
73	0.50	0.227	2,970	13,210	1,498	6,660	7,420	33,010	2,660	11,830	10,850	1,230	4,109	460	KB070XP0*RBC
59	0.73	0.331	3,550	15,790	1,931	8,590	8,870	39,460	3,420	15,210	13,080	1,480	5,341	600	KC070XP0*RBC
45	1.31	0.594	5,130	22,820	3,103	13,800	12,830	57,070	5,880	26,160	19,240	2,170	8,810	1,000	KD070XP0*RBC
31	3.20	1.451	8,750	38,920	6,103	27,150	21,870	97,280	10,640	47,330	33,890	3,830	17,744	2,000	KF070XP0*RBC
24	5.80	2.631	13,130	58,410	10,208	45,410	32,830	146,040	19,330	85,980	52,530	5,940	30,930	3,490	KG070XP0*RBC
93	0.34	0.154	2,350	10,450	1,089	4,840	5,880	26,160	1,890	8,410	9,120	1,030	3,165	360	KA075XP0*RBC
78	0.53	0.240	3,170	14,100	1,559	6,930	7,920	35,230	2,730	12,140	12,380	1,400	4,568	520	KB075XP0*RBC
63	0.78	0.354	3,790	16,860	2,007	8,930	9,470	42,120	3,480	15,480	14,910	1,680	5,930	670	KC075XP0*RBC
48	1.41	0.640	5,470	24,330	3,222	14,330	13,680	60,850	6,060	26,960	21,890	2,470	9,700	1,100	KD075XP0*RBC
33	3.40	1.542	9,310	41,410	6,323	28,130	23,280	103,550	10,930	48,620	38,410	4,340	19,568	2,210	KF075XP0*RBC
25	6.10	2.767	13,680	60,850	10,410	46,310	34,200	152,130	19,460	86,560	58,140	6,570	33,196	3,750	KG075XP0*RBC
99	0.38	0.172	2,500	11,120	1,131	5,030	6,260	27,850	1,970	8,760	10,330	1,170	3,499	400	KA080XP0*RBC
83	0.57	0.259	3,370	14,990	1,618	7,200	8,430	37,500	2,790	12,410	14,020	1,580	5,045	570	KB080XP0*RBC
67	0.84	0.381	4,030	17,930	2,082	9,260	10,070	44,790	3,560	15,840	16,870	1,910	6,542	740	KC080XP0*RBC
51	1.53	0.694	5,810	25,840	3,338	14,850	14,540	64,680	6,170	27,450	24,710	2,790	10,643	1,200	KD080XP0*RBC
35	3.50	1.588	9,880	43,950	6,535	29,070	24,690	109,830	11,190	49,780	43,200	4,880	21,453	2,420	KF080XP0*RBC
27	6.50	2.948	14,770	65,700	10,882	48,410	36,940	164,320	20,230	89,990	66,480	7,510	36,743	4,150	KG080XP0*RBC
111	0.44	0.200	2,810	12,500	1,212	5,390	7,020	31,230	2,040	9,070	12,990	1,470	4,204	470	KA090XP0*RBC
93	0.66	0.299	3,780	16,810	1,732	7,700	9,450	42,040	2,890	12,860	17,600	1,990	6,050	680	KB090XP0*RBC
75	0.94	0.426	4,510	20,060	2,226	9,900	11,270	50,130	3,690	16,410	21,130	2,390	7,830	880	KC090XP0*RBC
57	1.72	0.780	6,500	28,910	3,561	15,840	16,250	72,280	6,410	28,510	30,870	3,490	12,693	1,430	KD090XP0*RBC
39	3.90	1.769	11,000	48,930	6,947	30,900	27,510	122,370	11,630	51,730	53,640	6,060	25,410	2,870	KF090XP0*RBC
30	7.20	3.266	16,420	73,040	11,526	51,270	41,040	182,560	21,020	93,500	82,080	9,270	43,240	4,890	KG090XP0*RBC
123	0.50	0.227	3,110	13,830	1,289	5,730	7,780	34,610	2,180	9,700	15,940	1,800	4,956	560	KA100XP0*RBC
103	0.73	0.331	4,190	18,640	1,841	8,190	10,460	46,530	3,080	13,700	21,580	2,440	7,121	800	KB100XP0*RBC
83	1.06	0.481	4,990	22,200	2,364	10,520	12,470	55,470	3,930	17,480	25,880	2,920	9,201	1,040	KC100XP0*RBC
63	1.88	0.853	7,180	31,940	3,776	16,800	17,960	79,890	6,680	29,710	37,710	4,260	14,872	1,680	KD100XP0*RBC
43	4.30	1.950	12,130	53,960	7,342	32,660	30,330	134,910	12,100	53,820	65,210	7,370	29,608	3,350	KF100XP0*RBC
33	7.90	3.583	18,060	80,330	12,147	54,030	45,140	200,790	21,790	96,930	99,320	11,220	50,124	5,660	KG100XP0*RBC

Refer to the Engineering section for load and speed limitations.

4-POINT CONTACT, X-TYPE

THIN SECTION BALL BEARINGS

Series:	KAA	KA	KB	KC	KD	KF	KG
Cross Section Size:	3/16"	1/4"	5/16"	3/8"	1/2"	3/4"	1"

PART NUMBER*	NOMINAL DIMENSIONS												
	B Bore		D Outside Diameter		W Width		Land Diameter L_i -Inner Ring		Land Diameter L_o -Outer Ring		f_1 Housing Fillet		Ball Diameter
	in.	mm	in.	mm	in.	mm	in.	mm	in.	mm	in.	mm	in.
KA110XP0*RBC	11.0000	279.400	11.5000	292.100	0.2500	6.350	11.188	284.18	11.313	287.35	0.025	0.64	1/8
KB110XP0*RBC	11.0000	279.400	11.6250	295.275	0.3125	7.938	11.234	285.34	11.391	289.33	0.032	0.81	5/32
KC110XP0*RBC	11.0000	279.400	11.7500	298.450	0.3750	9.525	11.281	286.54	11.469	291.31	0.040	1.02	3/16
KD110XP0*RBC	11.0000	279.400	12.0000	304.800	0.5000	12.700	11.375	288.93	11.625	295.28	0.060	1.52	1/4
KF110XP0*RBC	11.0000	279.400	12.5000	317.500	0.7500	19.050	11.563	293.70	11.938	303.23	0.080	2.03	3/8
KG110XP0*RBC	11.0000	279.400	13.0000	330.200	1.0000	25.400	11.750	298.45	12.250	311.15	0.080	2.03	1/2
KA120XP0*RBC	12.0000	304.800	12.5000	317.500	0.2500	6.350	12.188	309.58	12.313	312.75	0.025	0.64	1/8
KB120XP0*RBC	12.0000	304.800	12.6250	320.675	0.3125	7.938	12.234	310.74	12.391	314.73	0.032	0.81	5/32
KC120XP0*RBC	12.0000	304.800	12.7500	323.850	0.3750	9.525	12.281	311.94	12.469	316.71	0.040	1.02	3/16
KD120XP0*RBC	12.0000	304.800	13.0000	330.200	0.5000	12.700	12.375	314.33	12.625	320.68	0.060	1.52	1/4
KF120XP0*RBC	12.0000	304.800	13.5000	342.900	0.7500	19.050	12.563	319.10	12.938	328.63	0.080	2.03	3/8
KG120XP0*RBC	12.0000	304.800	14.0000	355.600	1.0000	25.400	12.750	323.85	13.250	336.55	0.080	2.03	1/2
KB140XP0*RBC	14.0000	355.600	14.6250	371.475	0.3125	7.938	14.234	361.54	14.391	365.53	0.032	0.81	5/32
KC140XP0*RBC	14.0000	355.600	14.7500	374.650	0.3750	9.525	14.281	362.74	14.469	367.51	0.040	1.02	3/16
KD140XP0*RBC	14.0000	355.600	15.0000	381.000	0.5000	12.700	14.375	365.13	14.625	371.48	0.060	1.52	1/4
KF140XP0*RBC	14.0000	355.600	15.5000	393.700	0.7500	19.050	14.563	369.90	14.938	379.43	0.080	2.03	3/8
KG140XP0*RBC	14.0000	355.600	16.0000	406.400	1.0000	25.400	14.750	374.65	15.250	387.35	0.080	2.03	1/2
KB160XP0*RBC	16.0000	406.400	16.6250	422.275	0.3125	7.938	16.234	412.34	16.391	416.33	0.032	0.81	5/32
KC160XP0*RBC	16.0000	406.400	16.7500	425.450	0.3750	9.525	16.281	413.54	16.469	418.31	0.040	1.02	3/16
KD160XP0*RBC	16.0000	406.400	17.0000	431.800	0.5000	12.700	16.375	415.93	16.625	422.28	0.060	1.52	1/4
KF160XP0*RBC	16.0000	406.400	17.5000	444.500	0.7500	19.050	16.563	420.70	16.938	430.23	0.080	2.03	3/8
KG160XP0*RBC	16.0000	406.400	18.0000	457.200	1.0000	25.400	16.750	425.45	17.250	438.15	0.080	2.03	1/2
KB180XP0*RBC	18.0000	457.200	18.6250	473.075	0.3125	7.938	18.234	463.14	18.391	467.13	0.032	0.81	5/32
KC180XP0*RBC	18.0000	457.200	18.7500	476.250	0.3750	9.525	18.281	464.34	18.469	469.11	0.040	1.02	3/16
KD180XP0*RBC	18.0000	457.200	19.0000	482.600	0.5000	12.700	18.375	466.73	18.625	473.08	0.060	1.52	1/4
KF180XP0*RBC	18.0000	457.200	19.5000	495.300	0.7500	19.050	18.563	471.50	18.938	481.03	0.080	2.03	3/8
KG180XP0*RBC	18.0000	457.200	20.0000	508.000	1.0000	25.400	18.750	476.25	19.250	488.95	0.080	2.03	1/2
KB200XP0*RBC	20.0000	508.000	20.6250	523.875	0.3125	7.938	20.234	513.94	20.391	517.93	0.032	0.81	5/32
KC200XP0*RBC	20.0000	508.000	20.7500	527.050	0.3750	9.525	20.281	515.14	20.469	519.91	0.040	1.02	3/16
KD200XP0*RBC	20.0000	508.000	21.0000	533.400	0.5000	12.700	20.375	517.53	20.625	523.88	0.060	1.52	1/4
KF200XP0*RBC	20.0000	508.000	21.5000	546.100	0.7500	19.050	20.563	522.30	20.938	531.83	0.080	2.03	3/8
KG200XP0*RBC	20.0000	508.000	22.0000	558.800	1.0000	25.400	20.750	527.05	21.250	539.75	0.080	2.03	1/2
KC250XP0*RBC	25.0000	635.000	25.7500	654.050	0.3750	9.525	25.281	642.14	25.469	646.91	0.040	1.02	3/16
KD250XP0*RBC	25.0000	635.000	26.0000	660.400	0.5000	12.700	25.375	644.53	25.625	650.88	0.060	1.52	1/4
KF250XP0*RBC	25.0000	635.000	26.5000	673.100	0.7500	19.050	25.563	649.30	25.938	658.83	0.080	2.03	3/8
KG250XP0*RBC	25.0000	635.000	27.0000	685.800	1.0000	25.400	25.750	654.05	26.250	666.75	0.080	2.03	1/2
KG275XP0*RBC	27.5000	698.500	29.5000	749.300	1.0000	25.400	28.250	717.55	28.750	730.25	0.080	2.03	1/2
KC300XP0*RBC	30.0000	762.000	30.7500	781.050	0.3750	9.525	30.281	769.14	30.469	773.91	0.040	1.02	3/16
KD300XP0*RBC	30.0000	762.000	31.0000	787.400	0.5000	12.700	30.375	771.53	30.625	777.88	0.060	1.52	1/4
KF300XP0*RBC	30.0000	762.000	31.5000	800.100	0.7500	19.050	30.563	776.30	30.938	785.83	0.080	2.03	3/8
KG300XP0*RBC	30.0000	762.000	32.0000	812.800	1.0000	25.400	30.750	781.05	31.250	793.75	0.080	2.03	1/2
KG325XP0*RBC	32.5000	825.500	34.5000	876.300	1.0000	25.400	32.250	844.55	33.750	857.25	0.080	2.03	1/2
KF350XP0*RBC	35.0000	889.000	36.5000	927.100	0.7500	19.050	35.563	903.30	35.938	912.83	0.080	2.03	3/8
KG350XP0*RBC	35.0000	889.000	37.0000	939.800	1.0000	25.400	35.750	908.05	36.250	920.75	0.080	2.03	1/2
KG375XP0*RBC	37.5000	952.500	39.5000	1003.300	1.0000	25.400	38.250	971.55	38.750	984.25	0.080	2.03	1/2
KF400XP0*RBC	40.0000	1016.000	41.5000	1054.100	0.7500	19.050	40.563	1030.30	40.938	1039.83	0.080	2.03	3/8
KG400XP0*RBC	40.0000	1016.000	42.0000	1066.800	1.0000	25.400	40.750	1035.05	41.250	1047.75	0.080	2.03	1/2

*The alphanumeric identification system is used under license.

- 52100 Steel
- Large Diameter
- Light Weight
- Small Cross Section
- Snap-Over Ball Separator

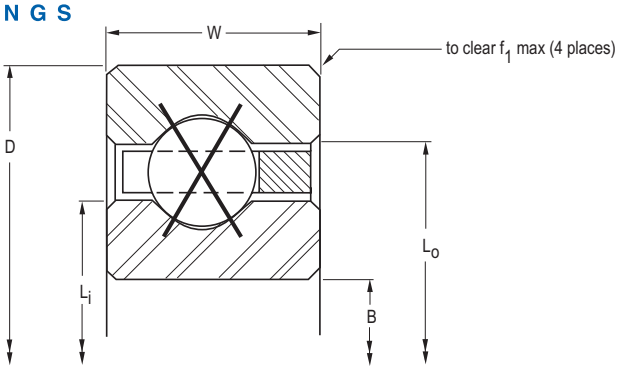

Ball Quantity	Approx. Weight lbs.	Approx. Weight kg	Radial Static lbf	Radial Static N	Radial Dynamic lbf	Radial Dynamic N	Thrust Static lbf	Thrust Static N	Thrust Dynamic lbf	Thrust Dynamic N	Moment Static lbf - in	Moment Static Nm	Moment Dynamic lbf - in	Moment Dynamic Nm	PART NUMBER*
135	0.52	0.236	3,410	15,170	1,362	6,060	8,540	37,990	2,320	10,320	19,210	2,170	5,750	650	KA110XP0*RBC
113	0.75	0.340	4,590	20,420	1,945	8,650	11,480	51,070	3,280	14,590	25,970	2,930	8,254	930	KB110XP0*RBC
91	1.16	0.526	5,470	24,330	2,496	11,100	13,680	60,850	4,180	18,590	31,110	3,510	10,651	1,200	KC110XP0*RBC
69	2.06	0.934	7,870	35,010	3,981	17,710	19,670	87,500	6,830	30,380	45,230	5,110	17,173	1,940	KD110XP0*RBC
47	4.80	2.177	13,260	58,980	7,721	34,340	33,150	147,460	12,490	55,560	77,910	8,800	34,032	3,850	KF110XP0*RBC
36	8.60	3.901	19,700	87,630	12,739	56,670	49,250	219,070	22,530	100,220	118,200	13,350	57,347	6,480	KG110XP0*RBC
147	0.56	0.254	3,720	16,550	1,433	6,370	9,300	41,370	2,450	10,900	22,770	2,570	6,587	740	KA120XP0*RBC
123	0.83	0.376	5,000	22,240	2,045	9,100	12,500	55,600	3,470	15,440	30,770	3,480	9,446	1,070	KB120XP0*RBC
99	1.25	0.567	5,950	26,470	2,622	11,660	14,880	66,190	4,420	19,660	36,830	4,160	12,174	1,380	KC120XP0*RBC
75	2.25	1.021	8,550	38,030	4,178	18,580	21,380	95,100	7,080	31,490	53,440	6,040	19,590	2,210	KD120XP0*RBC
51	5.20	2.359	14,390	64,010	8,084	35,960	35,970	160,000	13,190	58,670	91,730	10,360	38,666	4,370	KF120XP0*RBC
39	9.30	4.218	21,340	94,930	13,315	59,230	53,350	237,310	23,180	103,110	138,700	15,670	64,935	7,340	KG120XP0*RBC
143	1.05	0.476	5,810	25,840	2,234	9,940	14,530	64,630	3,840	17,080	41,580	4,700	11,994	1,360	KB140XP0*RBC
115	1.52	0.689	6,910	30,740	2,862	12,730	17,280	76,870	4,890	21,750	49,690	5,610	15,434	1,740	KC140XP0*RBC
87	2.73	1.238	9,920	44,130	4,551	20,240	24,800	110,320	7,670	34,120	71,910	8,120	24,755	2,800	KD140XP0*RBC
59	6.00	2.722	16,650	74,060	8,775	39,030	41,620	185,130	14,530	64,630	122,800	13,870	48,556	5,490	KF140XP0*RBC
45	10.80	4.899	24,620	109,520	14,404	64,070	61,560	273,830	24,300	108,090	184,700	20,870	81,056	9,160	KG140XP0*RBC
163	1.20	0.544	6,620	29,450	2,410	10,720	16,560	73,660	4,190	18,640	54,020	6,100	14,750	1,670	KB160XP0*RBC
131	1.73	0.785	7,880	35,050	3,086	13,730	19,690	87,590	5,330	23,710	64,480	7,290	18,955	2,140	KC160XP0*RBC
99	3.10	1.406	11,290	50,220	4,899	21,790	28,220	125,530	8,360	37,190	93,110	10,520	30,325	3,430	KD160XP0*RBC
67	7.10	3.221	18,900	84,070	9,421	41,910	47,260	210,220	15,820	70,370	158,300	17,890	59,200	6,690	KF160XP0*RBC
51	12.30	5.579	27,910	124,150	15,425	68,610	69,770	310,350	25,510	113,470	237,200	26,800	98,373	11,110	KG160XP0*RBC
183	1.35	0.612	7,440	33,090	2,576	11,460	18,590	82,690	4,520	20,110	68,090	7,690	17,694	2,000	KB180XP0*RBC
147	1.94	0.880	8,840	39,320	3,295	14,660	22,090	98,260	5,760	25,620	81,190	9,170	22,712	2,570	KC180XP0*RBC
111	3.48	1.579	12,650	56,270	5,226	23,250	31,640	140,740	9,030	40,170	117,000	13,220	36,268	4,100	KD180XP0*RBC
75	7.90	3.583	21,160	94,120	10,028	44,610	52,900	235,310	17,060	75,890	198,400	22,420	70,537	7,970	KF180XP0*RBC
57	13.70	6.214	31,190	138,740	16,386	72,890	77,980	346,870	27,410	121,930	296,300	33,480	116,793	13,200	KG180XP0*RBC
203	1.50	0.680	8,250	36,700	2,731	12,150	20,620	91,720	4,850	21,570	83,780	9,470	20,813	2,350	KB200XP0*RBC
163	2.16	0.980	9,800	43,590	3,492	15,530	24,500	108,980	6,170	27,450	99,830	11,280	26,695	3,020	KC200XP0*RBC
123	3.85	1.746	14,020	62,360	5,534	24,620	35,060	155,950	9,670	43,010	143,700	16,240	42,561	4,810	KD200XP0*RBC
83	8.90	4.037	23,420	104,180	10,602	47,160	58,550	260,440	18,250	81,180	243,000	27,460	82,528	9,320	KF200XP0*RBC
63	15.80	7.167	34,470	153,330	17,293	76,920	86,180	383,350	29,300	130,330	362,000	40,900	136,238	15,390	KG200XP0*RBC
203	2.69	1.220	12,200	54,270	3,941	17,530	30,510	135,720	7,140	31,760	154,800	17,490	37,518	4,240	KC250XP0*RBC
153	4.79	2.173	17,440	77,580	6,235	27,730	43,610	193,990	11,180	49,730	222,400	25,130	59,649	6,740	KD250XP0*RBC
103	10.90	4.944	29,060	129,270	11,909	52,970	72,650	323,160	21,070	93,720	374,200	42,280	115,037	13,000	KF250XP0*RBC
78	19.50	8.845	42,680	189,850	19,360	86,120	106,700	474,630	33,780	150,260	554,900	62,700	188,838	21,340	KG250XP0*RBC
86	21.50	9.761	46,785	208,110	20,280	90,210	116,950	520,220	35,880	159,602	671,850	75,910	217,690	24,600	KG275XP0*RBC
243	3.21	1.456	14,610	64,990	4,338	19,300	36,520	162,450	8,050	35,810	221,900	25,070	49,436	5,590	KC300XP0*RBC
183	5.73	2.599	20,860	92,790	6,856	30,500	52,160	232,020	12,600	56,050	318,100	35,940	78,447	8,860	KD300XP0*RBC
123	13.00	5.897	34,700	154,350	13,065	58,120	86,760	385,930	23,720	105,510	533,600	60,290	150,708	17,030	KF300XP0*RBC
93	23.30	10.569	50,890	226,370	21,200	94,300	127,200	565,810	37,980	168,940	788,800	89,120	246,541	27,860	KG300XP0*RBC
101	25.20	11.441	54,995	244,630	22,023	97,963	137,450	611,408	39,975	177,818	926,400	104,670	277,534	31,360	KG325XP0*RBC
143	15.10	6.849	40,350	179,490	14,100	62,720	100,900	448,830	26,220	116,630	721,200	81,480	189,106	21,370	KF350XP0*RBC
108	27.10	12.292	59,100	262,890	22,845	101,620	147,700	657,000	41,970	186,690	1,064,000	120,220	308,527	34,860	KG350XP0*RBC
116	29.00	13.166	63,205	281,150	23,589	104,929	158,000	702,819	43,870	195,143	122,000	13,790	341,392	38,580	KG375XP0*RBC
163	17.20	7.802	45,990	204,570	15,034	66,870	115,000	511,550	28,620	127,310	937,100	105,880	229,832	25,970	KF400XP0*RBC
123	30.80	13.971	67,310	299,410	24,332	108,230	168,300	748,640	45,770	203,600	1,380,000	155,920	374,256	42,290	KG400XP0*RBC

Refer to the Engineering section for load and speed limitations.

SEALED (MOLDED) RADIAL CONTACT, C-TYPE

THIN SECTION BALL BEARINGS

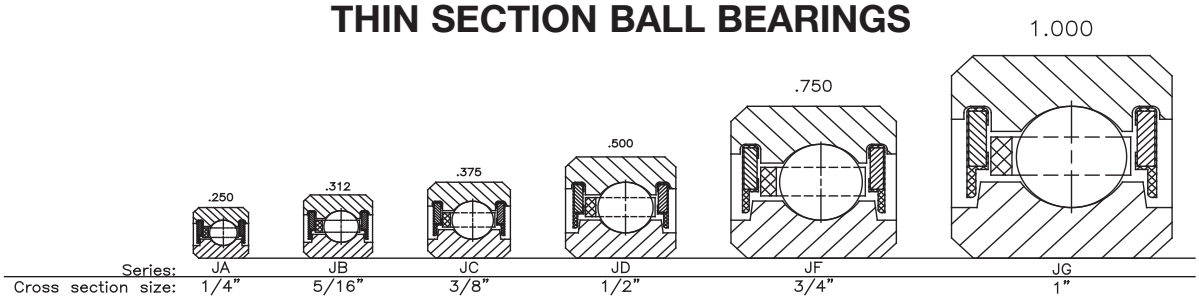

PART NUMBER*	NOMINAL DIMENSIONS												
	B Bore		D Outside Diameter		W Width		G_i Recess Diameter		M_o Groove Diameter		f_1 Housing Fillet		Ball Diameter
	in.	mm	in.	mm	in.	mm	in.	mm	in.	mm	in.	mm	in.
JA020CP0*RBC	2.0000	50.800	2.5000	63.500	0.2500	6.350	2.125	53.98	2.343	59.51	0.025	0.64	1/8
JB020CP0*RBC	2.0000	50.800	2.6250	66.675	0.3125	7.938	2.156	54.76	2.430	61.72	0.032	0.81	5/32
JA025CP0*RBC	2.5000	63.500	3.0000	76.200	0.2500	6.350	2.625	66.68	2.843	72.21	0.025	0.64	1/8
JB025CP0*RBC	2.5000	63.500	3.1250	79.375	0.3125	7.938	2.656	67.46	2.930	74.42	0.032	0.81	5/32
JA030CP0*RBC	3.0000	76.200	3.5000	88.900	0.2500	6.350	3.125	79.38	3.343	84.91	0.025	0.64	1/8
JB030CP0*RBC	3.0000	76.200	3.6250	92.075	0.3125	7.938	3.156	80.16	3.430	87.12	0.032	0.81	5/32
JA035CP0*RBC	3.5000	88.900	4.0000	101.600	0.2500	6.350	3.625	92.08	3.843	97.61	0.025	0.64	1/8
JB035CP0*RBC	3.5000	88.900	4.1250	104.775	0.3125	7.938	3.656	92.86	3.930	99.82	0.032	0.81	5/32
JA040CP0*RBC	4.0000	101.600	4.5000	114.300	0.2500	6.350	4.125	104.78	4.343	110.31	0.025	0.64	1/8
JB040CP0*RBC	4.0000	101.600	4.6250	117.475	0.3125	7.938	4.156	105.56	4.430	112.52	0.032	0.81	5/32
JC040CP0*RBC	4.0000	101.600	4.7500	120.650	0.3750	9.525	4.188	106.38	4.516	114.71	0.040	1.02	3/16
JD040CP0*RBC	4.0000	101.600	5.0000	127.000	0.5000	12.700	4.250	107.95	4.687	119.05	0.060	1.52	1/4
JF040CP0*RBC	4.0000	101.600	5.5000	139.700	0.7500	19.050	4.375	111.13	5.031	127.79	0.080	2.03	3/8
JG040CP0*RBC	4.0000	101.600	6.0000	152.400	1.0000	25.400	4.500	114.30	5.375	136.53	0.080	2.03	1/2
JA042CP0*RBC	4.2500	107.950	4.7500	120.650	0.2500	6.350	4.375	111.13	4.593	116.66	0.025	0.64	1/8
JB042CP0*RBC	4.2500	107.950	4.8750	123.825	0.3125	7.938	4.406	111.91	4.680	118.87	0.032	0.81	5/32
JC042CP0*RBC	4.2500	107.950	5.0000	127.000	0.3750	9.525	4.438	112.73	4.766	121.06	0.040	1.02	3/16
JD042CP0*RBC	4.2500	107.950	5.2500	133.350	0.5000	12.700	4.500	114.30	4.937	125.40	0.060	1.52	1/4
JF042CP0*RBC	4.2500	107.950	5.7500	146.050	0.7500	19.050	4.625	117.48	5.281	134.14	0.080	2.03	3/8
JG042CP0*RBC	4.2500	107.950	6.2500	158.750	1.0000	25.400	4.750	120.65	5.590	141.99	0.080	2.03	1/2
JA045CP0*RBC	4.5000	114.300	5.0000	127.000	0.2500	6.350	4.625	117.48	4.843	123.01	0.025	0.64	1/8
JB045CP0*RBC	4.5000	114.300	5.1250	130.175	0.3125	7.938	4.656	118.26	4.930	125.22	0.032	0.81	5/32
JC045CP0*RBC	4.5000	114.300	5.2500	133.350	0.3750	9.525	4.688	119.08	5.016	127.41	0.040	1.02	3/16
JD045CP0*RBC	4.5000	114.300	5.5000	139.700	0.5000	12.700	4.750	120.65	5.187	131.75	0.060	1.52	1/4
JF045CP0*RBC	4.5000	114.300	6.0000	152.400	0.7500	19.050	4.875	123.83	5.531	140.49	0.080	2.03	3/8
JG045CP0*RBC	4.5000	114.300	6.5000	165.100	1.0000	25.400	5.000	127.00	5.875	149.23	0.080	2.03	1/2
JA047CP0*RBC	4.7500	120.650	5.2500	133.350	0.2500	6.350	4.875	123.83	5.093	129.36	0.025	0.64	1/8
JB047CP0*RBC	4.7500	120.650	5.3750	136.525	0.3125	7.938	4.906	124.61	5.180	131.57	0.032	0.81	5/32
JC047CP0*RBC	4.7500	120.650	5.5000	139.700	0.3750	9.525	4.938	125.43	5.266	133.76	0.040	1.02	3/16
JD047CP0*RBC	4.7500	120.650	5.7500	146.050	0.5000	12.700	5.000	127.00	5.437	138.10	0.060	1.52	1/4
JF047CP0*RBC	4.7500	120.650	6.2500	158.750	0.7500	19.050	5.125	130.18	5.781	146.84	0.080	2.03	3/8
JG047CP0*RBC	4.7500	120.650	6.7500	171.450	1.0000	25.400	5.250	133.35	6.090	154.69	0.080	2.03	1/2
JA050CP0*RBC	5.0000	127.000	5.5000	139.700	0.2500	6.350	5.125	130.18	5.343	135.71	0.025	0.64	1/8
JB050CP0*RBC	5.0000	127.000	5.6250	142.875	0.3125	7.938	5.156	130.96	5.430	137.92	0.032	0.81	5/32
JC050CP0*RBC	5.0000	127.000	5.7500	146.050	0.3750	9.525	5.188	131.78	5.516	140.11	0.040	1.02	3/16
JD050CP0*RBC	5.0000	127.000	6.0000	152.400	0.5000	12.700	5.250	133.35	5.687	144.45	0.060	1.52	1/4
JF050CP0*RBC	5.0000	127.000	6.5000	165.100	0.7500	19.050	5.375	136.53	6.031	153.19	0.080	2.03	3/8
JG050CP0*RBC	5.0000	127.000	7.0000	177.800	1.0000	25.400	5.500	139.70	6.375	161.93	0.080	2.03	1/2
JA055CP0*RBC	5.5000	139.700	6.0000	152.400	0.2500	6.350	5.625	142.88	5.843	148.41	0.025	0.64	1/8
JB055CP0*RBC	5.5000	139.700	6.1250	155.575	0.3125	7.938	5.656	143.66	5.930	150.62	0.032	0.81	5/32
JC055CP0*RBC	5.5000	139.700	6.2500	158.750	0.3750	9.525	5.688	144.48	6.016	152.81	0.040	1.02	3/16
JD055CP0*RBC	5.5000	139.700	6.5000	165.100	0.5000	12.700	5.750	146.05	6.187	157.15	0.060	1.52	1/4
JF055CP0*RBC	5.5000	139.700	7.0000	177.800	0.7500	19.050	5.875	149.23	6.531	165.89	0.080	2.03	3/8
JG055CP0*RBC	5.5000	139.700	7.5000	190.500	1.0000	25.400	6.000	152.40	6.875	174.63	0.080	2.03	1/2

*The alphanumeric identification system is used under license.

- 52100 Steel
- Large Diameter
- Light Weight
- Small Cross Section
- Snap-Over Ball Separator
- Sealed

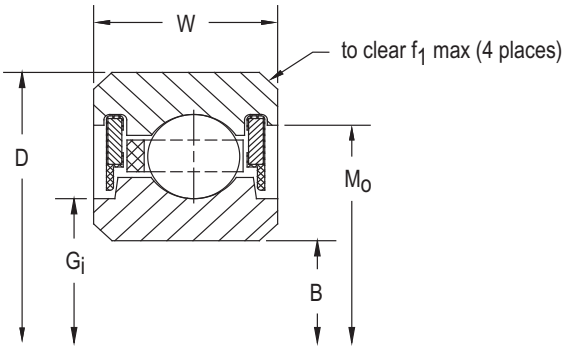

Ball Quantity	Approx. Weight lbs.	Approx. Weight kg	LOAD RATINGS Radial Static lbf	Radial Static N	Radial Dynamic lbf	Radial Dynamic N	Thrust Static lbf	Thrust Static N	Thrust Dynamic lbf	Thrust Dynamic N	Moment Static lbf - in	Moment Static Nm	Moment Dynamic lbf - in	Moment Dynamic Nm	PART NUMBER*
27	0.10	0.045	680	3,020	560	2,490	N/A	N/A	N/A	N/A	N/A	N/A	N/A	N/A	JA020CP0*RBC
23	0.16	0.073	930	4,140	800	3,560	N/A	N/A	N/A	N/A	N/A	N/A	N/A	N/A	JB020CP0*RBC
33	0.13	0.059	830	3,690	610	2,710	N/A	N/A	N/A	N/A	N/A	N/A	N/A	N/A	JA025CP0*RBC
28	0.20	0.091	1,140	5,070	860	3,830	N/A	N/A	N/A	N/A	N/A	N/A	N/A	N/A	JB025CP0*RBC
39	0.15	0.068	990	4,400	650	2,890	N/A	N/A	N/A	N/A	N/A	N/A	N/A	N/A	JA030CP0*RBC
33	0.24	0.109	1,340	5,960	920	4,090	N/A	N/A	N/A	N/A	N/A	N/A	N/A	N/A	JB030CP0*RBC
45	0.18	0.082	1,140	5,070	690	3,070	N/A	N/A	N/A	N/A	N/A	N/A	N/A	N/A	JA035CP0*RBC
38	0.27	0.122	1,540	6,850	970	4,310	N/A	N/A	N/A	N/A	N/A	N/A	N/A	N/A	JB035CP0*RBC
51	0.19	0.086	1,290	5,740	720	3,200	N/A	N/A	N/A	N/A	N/A	N/A	N/A	N/A	JA040CP0*RBC
43	0.30	0.136	1,750	7,780	1,020	4,540	N/A	N/A	N/A	N/A	N/A	N/A	N/A	N/A	JB040CP0*RBC
35	0.45	0.204	2,100	9,340	1,290	5,740	N/A	N/A	N/A	N/A	N/A	N/A	N/A	N/A	JC040CP0*RBC
27	0.78	0.354	3,080	13,700	2,250	10,010	N/A	N/A	N/A	N/A	N/A	N/A	N/A	N/A	JD040CP0*RBC
19	1.90	0.862	5,360	23,840	3,940	17,530	N/A	N/A	N/A	N/A	N/A	N/A	N/A	N/A	JF040CP0*RBC
15	3.60	1.633	8,210	36,520	6,700	29,800	N/A	N/A	N/A	N/A	N/A	N/A	N/A	N/A	JG040CP0*RBC
54	0.20	0.091	1,370	6,090	730	3,250	N/A	N/A	N/A	N/A	N/A	N/A	N/A	N/A	JA042CP0*RBC
45	0.31	0.141	1,830	8,140	1,030	4,580	N/A	N/A	N/A	N/A	N/A	N/A	N/A	N/A	JB042CP0*RBC
37	0.47	0.213	2,220	9,880	1,320	5,870	N/A	N/A	N/A	N/A	N/A	N/A	N/A	N/A	JC042CP0*RBC
28	0.83	0.376	3,190	14,190	2,270	10,100	N/A	N/A	N/A	N/A	N/A	N/A	N/A	N/A	JD042CP0*RBC
20	2.00	0.907	5,640	25,090	4,070	18,100	N/A	N/A	N/A	N/A	N/A	N/A	N/A	N/A	JF042CP0*RBC
15	3.80	1.724	8,210	36,520	6,700	29,800	N/A	N/A	N/A	N/A	N/A	N/A	N/A	N/A	JG042CP0*RBC
57	0.22	0.100	1,440	6,410	750	3,340	N/A	N/A	N/A	N/A	N/A	N/A	N/A	N/A	JA045CP0*RBC
48	0.33	0.150	1,950	8,670	1,060	4,720	N/A	N/A	N/A	N/A	N/A	N/A	N/A	N/A	JB045CP0*RBC
39	0.48	0.218	2,340	10,410	1,350	6,010	N/A	N/A	N/A	N/A	N/A	N/A	N/A	N/A	JC045CP0*RBC
30	0.88	0.399	3,420	15,210	2,350	10,450	N/A	N/A	N/A	N/A	N/A	N/A	N/A	N/A	JD045CP0*RBC
21	2.10	0.953	5,930	26,380	4,210	18,730	N/A	N/A	N/A	N/A	N/A	N/A	N/A	N/A	JF045CP0*RBC
16	4.00	1.814	8,760	38,970	7,000	31,140	N/A	N/A	N/A	N/A	N/A	N/A	N/A	N/A	JG045CP0*RBC
60	0.23	0.104	1,520	6,760	760	3,380	N/A	N/A	N/A	N/A	N/A	N/A	N/A	N/A	JA047CP0*RBC
50	0.34	0.154	2,030	9,030	1,070	4,760	N/A	N/A	N/A	N/A	N/A	N/A	N/A	N/A	JB047CP0*RBC
41	0.50	0.227	2,460	10,940	1,370	6,090	N/A	N/A	N/A	N/A	N/A	N/A	N/A	N/A	JC047CP0*RBC
31	0.94	0.426	3,530	15,700	2,360	10,500	N/A	N/A	N/A	N/A	N/A	N/A	N/A	N/A	JD047CP0*RBC
22	2.20	0.998	6,210	27,620	4,310	19,170	N/A	N/A	N/A	N/A	N/A	N/A	N/A	N/A	JF047CP0*RBC
17	4.10	1.860	9,300	41,370	7,290	32,430	N/A	N/A	N/A	N/A	N/A	N/A	N/A	N/A	JG047CP0*RBC
63	0.24	0.109	1,590	7,070	770	3,430	N/A	N/A	N/A	N/A	N/A	N/A	N/A	N/A	JA050CP0*RBC
53	0.38	0.172	2,150	9,560	1,100	4,890	N/A	N/A	N/A	N/A	N/A	N/A	N/A	N/A	JB050CP0*RBC
43	0.58	0.263	2,590	11,520	1,390	6,180	N/A	N/A	N/A	N/A	N/A	N/A	N/A	N/A	JC050CP0*RBC
33	1.00	0.454	3,760	16,730	2,430	10,810	N/A	N/A	N/A	N/A	N/A	N/A	N/A	N/A	JD050CP0*RBC
23	2.30	1.043	6,490	28,870	4,380	19,480	N/A	N/A	N/A	N/A	N/A	N/A	N/A	N/A	JF050CP0*RBC
18	4.30	1.950	9,850	43,810	7,570	33,670	N/A	N/A	N/A	N/A	N/A	N/A	N/A	N/A	JG050CP0*RBC
69	0.25	0.113	1,750	7,780	800	3,560	N/A	N/A	N/A	N/A	N/A	N/A	N/A	N/A	JA055CP0*RBC
58	0.41	0.186	2,360	10,500	1,130	5,030	N/A	N/A	N/A	N/A	N/A	N/A	N/A	N/A	JB055CP0*RBC
47	0.59	0.268	2,830	12,590	1,440	6,410	N/A	N/A	N/A	N/A	N/A	N/A	N/A	N/A	JC055CP0*RBC
36	1.06	0.481	4,100	18,240	2,510	11,170	N/A	N/A	N/A	N/A	N/A	N/A	N/A	N/A	JD055CP0*RBC
25	2.50	1.134	7,050	31,360	4,540	20,190	N/A	N/A	N/A	N/A	N/A	N/A	N/A	N/A	JF055CP0*RBC
19	4.70	2.132	10,400	46,260	7,850	34,920	N/A	N/A	N/A	N/A	N/A	N/A	N/A	N/A	JG055CP0*RBC

Refer to the Engineering section for load and speed limitations.

SEALED (MOLDED) RADIAL CONTACT, C-TYPE

THIN SECTION BALL BEARINGS

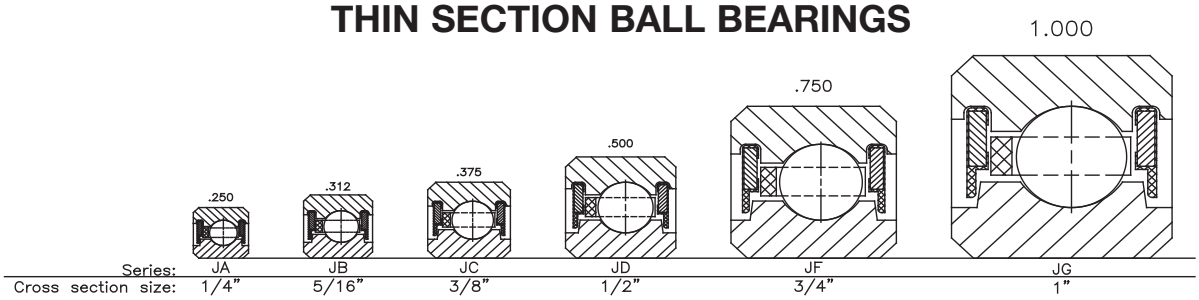

PART NUMBER*	NOMINAL DIMENSIONS												
	B Bore		D Outside Diameter		W Width		G_i Recess Diameter		M_o Groove Diameter		f_1 Housing Fillet		Ball Diameter
	in.	mm	in.	mm	in.	mm	in.	mm	in.	mm	in.	mm	in.
JA060CP0*RBC	6.0000	152.400	6.5000	165.100	0.2500	6.350	6.125	155.58	6.343	161.11	0.025	0.64	1/8
JB060CP0*RBC	6.0000	152.400	6.6250	168.275	0.3125	7.938	6.155	156.34	6.430	163.32	0.032	0.81	5/32
JC060CP0*RBC	6.0000	152.400	6.7500	171.450	0.3750	9.525	6.188	157.18	6.516	165.51	0.040	1.02	3/16
JD060CP0*RBC	6.0000	152.400	7.0000	177.800	0.5000	12.700	6.250	158.75	6.687	169.85	0.060	1.52	1/4
JF060CP0*RBC	6.0000	152.400	7.5000	190.500	0.7500	19.050	6.375	161.93	7.031	178.59	0.080	2.03	3/8
JG060CP0*RBC	6.0000	152.400	8.0000	203.200	1.0000	25.400	6.500	165.10	7.375	187.33	0.080	2.03	1/2
JA065CP0*RBC	6.5000	165.100	7.0000	177.800	0.2500	6.350	6.625	168.28	6.843	173.81	0.025	0.64	1/8
JB065CP0*RBC	6.5000	165.100	7.1250	180.975	0.3125	7.938	6.656	169.06	6.930	176.02	0.032	0.81	5/32
JC065CP0*RBC	6.5000	165.100	7.2500	184.150	0.3750	9.525	6.688	169.88	7.016	178.21	0.040	1.02	3/16
JD065CP0*RBC	6.5000	165.100	7.5000	190.500	0.5000	12.700	6.750	171.45	7.187	182.55	0.060	1.52	1/4
JF065CP0*RBC	6.5000	165.100	8.0000	203.200	0.7500	19.050	6.875	174.63	7.531	191.29	0.080	2.03	3/8
JG065CP0*RBC	6.5000	165.100	8.5000	215.900	1.0000	25.400	7.000	177.80	7.875	200.03	0.080	2.03	1/2
JA070CP0*RBC	7.0000	177.800	7.5000	190.500	0.2500	6.350	7.125	180.98	7.343	186.51	0.025	0.64	1/8
JB070CP0*RBC	7.0000	177.800	7.6250	193.675	0.3125	7.938	7.156	181.76	7.430	188.72	0.032	0.81	5/32
JC070CP0*RBC	7.0000	177.800	7.7500	196.850	0.3750	9.525	7.188	182.58	7.516	190.91	0.040	1.02	3/16
JD070CP0*RBC	7.0000	177.800	8.0000	203.200	0.5000	12.700	7.250	184.15	7.687	195.25	0.060	1.52	1/4
JF070CP0*RBC	7.0000	177.800	8.5000	215.900	0.7500	19.050	7.375	187.33	8.031	203.99	0.080	2.03	3/8
JG070CP0*RBC	7.0000	177.800	9.0000	228.600	1.0000	25.400	7.500	190.50	8.375	212.73	0.080	2.03	1/2
JA075CP0*RBC	7.5000	190.500	8.0000	203.200	0.2500	6.350	7.625	193.68	7.843	199.21	0.025	0.64	1/8
JB075CP0*RBC	7.5000	190.500	8.1250	206.375	0.3125	7.938	7.656	194.46	7.930	201.42	0.032	0.81	5/32
JC075CP0*RBC	7.5000	190.500	8.2500	209.550	0.3750	9.525	7.688	195.28	8.016	203.61	0.040	1.02	3/16
JD075CP0*RBC	7.5000	190.500	8.5000	215.900	0.5000	12.700	7.750	196.85	8.187	207.95	0.060	1.52	1/4
JF075CP0*RBC	7.5000	190.500	9.0000	228.600	0.7500	19.050	7.875	200.03	8.531	216.69	0.080	2.03	3/8
JG075CP0*RBC	7.5000	190.500	9.5000	241.300	1.0000	25.400	8.000	203.20	8.875	225.43	0.080	2.03	1/2
JA080CP0*RBC	8.0000	203.200	8.5000	215.900	0.2500	6.350	8.125	206.38	8.343	211.91	0.025	0.64	1/8
JB080CP0*RBC	8.0000	203.200	8.6250	219.075	0.3125	7.938	8.156	207.16	8.430	214.12	0.032	0.81	5/32
JC080CP0*RBC	8.0000	203.200	8.7500	222.250	0.3750	9.525	8.188	207.98	8.516	216.31	0.040	1.02	3/16
JD080CP0*RBC	8.0000	203.200	9.0000	228.600	0.5000	12.700	8.250	209.55	8.687	220.65	0.060	1.52	1/4
JF080CP0*RBC	8.0000	203.200	9.5000	241.300	0.7500	19.050	8.375	212.73	9.031	229.39	0.080	2.03	3/8
JG080CP0*RBC	8.0000	203.200	10.0000	254.000	1.0000	25.400	8.500	215.90	9.375	238.13	0.080	2.03	1/2
JA090CP0*RBC	9.0000	228.600	9.5000	241.300	0.2500	6.350	9.125	231.78	9.343	237.31	0.025	0.64	1/8
JB090CP0*RBC	9.0000	228.600	9.6250	244.475	0.3125	7.938	9.156	232.56	9.430	239.52	0.032	0.81	5/32
JC090CP0*RBC	9.0000	228.600	9.7500	247.650	0.3750	9.525	9.188	233.38	9.516	241.71	0.040	1.02	3/16
JD090CP0*RBC	9.0000	228.600	10.0000	254.000	0.5000	12.700	9.250	234.95	9.687	246.05	0.060	1.52	1/4
JF090CP0*RBC	9.0000	228.600	10.5000	266.700	0.7500	19.050	9.375	238.13	10.031	254.79	0.080	2.03	3/8
JG090CP0*RBC	9.0000	228.600	11.0000	279.400	1.0000	25.400	9.500	241.30	10.375	263.53	0.080	2.03	1/2
JA100CP0*RBC	10.0000	254.000	10.5000	266.700	0.2500	6.350	10.125	257.18	10.343	262.71	0.025	0.64	1/8
JB100CP0*RBC	10.0000	254.000	10.6250	269.875	0.3125	7.938	10.156	257.96	10.430	264.92	0.032	0.81	5/32
JC100CP0*RBC	10.0000	254.000	10.7500	273.050	0.3750	9.525	10.188	258.78	10.516	267.11	0.040	1.02	3/16
JD100CP0*RBC	10.0000	254.000	11.0000	279.400	0.5000	12.700	10.250	260.35	10.687	271.45	0.060	1.52	1/4
JF100CP0*RBC	10.0000	254.000	11.5000	292.100	0.7500	19.050	10.375	236.53	11.031	280.91	0.080	2.03	3/8
JG100CP0*RBC	10.0000	254.000	12.0000	304.800	1.0000	25.400	10.500	266.70	11.375	288.93	0.080	2.03	1/2
JA110CP0*RBC	11.0000	279.400	11.5000	292.100	0.2500	6.350	11.125	282.58	11.343	288.11	0.025	0.64	1/8
JB110CP0*RBC	11.0000	279.400	11.6250	295.275	0.3125	7.938	11.156	283.36	11.430	290.32	0.032	0.81	5/32

*The alphanumeric identification system is used under license.

- 52100 Steel
- Large Diameter
- Light Weight
- Small Cross Section
- Snap-Over Ball Separator
- Sealed

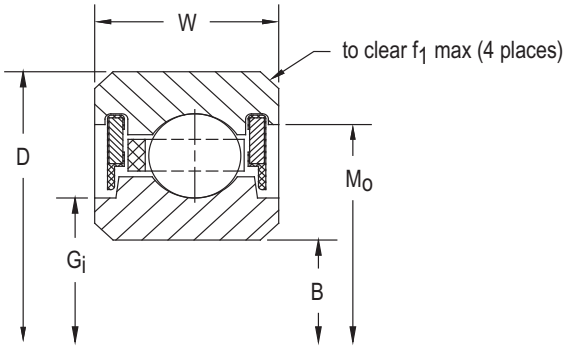

Ball Quantity	Approx. Weight lbs.	Approx. Weight kg	LOAD RATINGS Radial Static lbf	Radial Static N	Radial Dynamic lbf	Radial Dynamic N	Thrust Static lbf	Thrust Static N	Thrust Dynamic lbf	Thrust Dynamic N	Moment Static lbf - in	Moment Static Nm	Moment Dynamic lbf - in	Moment Dynamic Nm	PART NUMBER*
75	0.28	0.127	1,900	8,450	830	3,690	N/A	N/A	N/A	N/A	N/A	N/A	N/A	N/A	JA060CP0*RBC
63	0.44	0.200	2,560	11,390	1,170	5,200	N/A	N/A	N/A	N/A	N/A	N/A	N/A	N/A	JB060CP0*RBC
51	0.63	0.286	3,070	13,660	1,490	6,630	N/A	N/A	N/A	N/A	N/A	N/A	N/A	N/A	JC060CP0*RBC
39	1.16	0.526	4,450	19,790	2,580	11,480	N/A	N/A	N/A	N/A	N/A	N/A	N/A	N/A	JD060CP0*RBC
27	2.70	1.225	7,620	33,900	4,660	20,730	N/A	N/A	N/A	N/A	N/A	N/A	N/A	N/A	JF060CP0*RBC
21	5.10	2.313	11,490	51,110	8,390	37,320	N/A	N/A	N/A	N/A	N/A	N/A	N/A	N/A	JG060CP0*RBC
81	0.30	0.136	2,050	9,120	850	3,780	N/A	N/A	N/A	N/A	N/A	N/A	N/A	N/A	JA065CP0*RBC
68	0.47	0.213	2,760	12,280	1,200	5,340	N/A	N/A	N/A	N/A	N/A	N/A	N/A	N/A	JB065CP0*RBC
55	0.68	0.308	3,310	14,720	1,530	6,810	N/A	N/A	N/A	N/A	N/A	N/A	N/A	N/A	JC065CP0*RBC
42	1.22	0.553	4,790	21,310	2,650	11,790	N/A	N/A	N/A	N/A	N/A	N/A	N/A	N/A	JD065CP0*RBC
29	2.90	1.315	8,180	36,390	4,790	21,310	N/A	N/A	N/A	N/A	N/A	N/A	N/A	N/A	JF065CP0*RBC
22	5.40	2.449	12,040	53,560	8,520	37,900	N/A	N/A	N/A	N/A	N/A	N/A	N/A	N/A	JG065CP0*RBC
87	0.31	0.141	2,200	9,790	870	3,870	N/A	N/A	N/A	N/A	N/A	N/A	N/A	N/A	JA070CP0*RBC
73	0.50	0.227	2,970	13,210	1,240	5,520	N/A	N/A	N/A	N/A	N/A	N/A	N/A	N/A	JB070CP0*RBC
59	0.73	0.331	3,550	15,790	1,570	6,980	N/A	N/A	N/A	N/A	N/A	N/A	N/A	N/A	JC070CP0*RBC
45	1.31	0.594	5,130	22,820	2,730	12,140	N/A	N/A	N/A	N/A	N/A	N/A	N/A	N/A	JD070CP0*RBC
31	3.20	1.451	8,750	38,920	4,920	21,890	N/A	N/A	N/A	N/A	N/A	N/A	N/A	N/A	JF070CP0*RBC
24	5.80	2.631	13,130	58,410	8,880	39,500	N/A	N/A	N/A	N/A	N/A	N/A	N/A	N/A	JG070CP0*RBC
93	0.34	0.154	2,350	10,450	890	3,960	N/A	N/A	N/A	N/A	N/A	N/A	N/A	N/A	JA075CP0*RBC
78	0.53	0.240	3,170	14,100	1,280	5,690	N/A	N/A	N/A	N/A	N/A	N/A	N/A	N/A	JB075CP0*RBC
63	0.78	0.354	3,790	16,860	1,600	7,120	N/A	N/A	N/A	N/A	N/A	N/A	N/A	N/A	JC075CP0*RBC
48	1.41	0.640	5,470	24,330	2,800	12,460	N/A	N/A	N/A	N/A	N/A	N/A	N/A	N/A	JD075CP0*RBC
33	3.40	1.542	9,310	41,410	5,040	22,420	N/A	N/A	N/A	N/A	N/A	N/A	N/A	N/A	JF075CP0*RBC
25	6.10	2.767	13,680	60,850	8,960	39,860	N/A	N/A	N/A	N/A	N/A	N/A	N/A	N/A	JG075CP0*RBC
99	0.38	0.172	2,500	11,120	910	4,050	N/A	N/A	N/A	N/A	N/A	N/A	N/A	N/A	JA080CP0*RBC
83	0.57	0.259	3,370	14,990	1,280	5,690	N/A	N/A	N/A	N/A	N/A	N/A	N/A	N/A	JB080CP0*RBC
67	0.84	0.381	4,030	17,930	1,650	7,340	N/A	N/A	N/A	N/A	N/A	N/A	N/A	N/A	JC080CP0*RBC
51	1.53	0.694	5,810	25,840	2,860	12,720	N/A	N/A	N/A	N/A	N/A	N/A	N/A	N/A	JD080CP0*RBC
35	3.50	1.588	9,880	43,950	5,140	22,860	N/A	N/A	N/A	N/A	N/A	N/A	N/A	N/A	JF080CP0*RBC
27	6.50	2.948	14,770	65,700	9,300	41,370	N/A	N/A	N/A	N/A	N/A	N/A	N/A	N/A	JG080CP0*RBC
111	0.44	0.200	2,810	12,500	940	4,180	N/A	N/A	N/A	N/A	N/A	N/A	N/A	N/A	JA090CP0*RBC
93	0.66	0.299	3,780	16,810	1,330	5,920	N/A	N/A	N/A	N/A	N/A	N/A	N/A	N/A	JB090CP0*RBC
75	0.94	0.426	4,510	20,060	1,730	7,700	N/A	N/A	N/A	N/A	N/A	N/A	N/A	N/A	JC090CP0*RBC
57	1.72	0.780	6,500	28,910	2,970	13,210	N/A	N/A	N/A	N/A	N/A	N/A	N/A	N/A	JD090CP0*RBC
39	3.90	1.769	11,000	48,930	5,360	23,840	N/A	N/A	N/A	N/A	N/A	N/A	N/A	N/A	JF090CP0*RBC
30	7.20	3.266	16,420	73,040	9,720	43,240	N/A	N/A	N/A	N/A	N/A	N/A	N/A	N/A	JG090CP0*RBC
123	0.50	0.227	3,110	13,830	990	4,400	N/A	N/A	N/A	N/A	N/A	N/A	N/A	N/A	JA100CP0*RBC
103	0.73	0.331	4,190	18,640	1,400	6,230	N/A	N/A	N/A	N/A	N/A	N/A	N/A	N/A	JB100CP0*RBC
83	1.06	0.481	4,990	22,200	1,781	7,920	N/A	N/A	N/A	N/A	N/A	N/A	N/A	N/A	JC100CP0*RBC
63	1.88	0.853	7,180	31,940	3,070	13,660	N/A	N/A	N/A	N/A	N/A	N/A	N/A	N/A	JD100CP0*RBC
43	4.30	1.950	12,130	53,960	5,550	24,690	N/A	N/A	N/A	N/A	N/A	N/A	N/A	N/A	JF100CP0*RBC
33	7.90	3.583	18,060	80,330	10,040	44,660	N/A	N/A	N/A	N/A	N/A	N/A	N/A	N/A	JG100CP0*RBC
135	0.52	0.236	3,410	15,170	1,030	4,580	N/A	N/A	N/A	N/A	N/A	N/A	N/A	N/A	JA110CP0*RBC
113	0.75	0.340	4,590	20,420	1,464	6,510	N/A	N/A	N/A	N/A	N/A	N/A	N/A	N/A	JB110CP0*RBC

Refer to the Engineering section for load and speed limitations.

SEALED (MOLDED) RADIAL CONTACT, C-TYPE

THIN SECTION BALL BEARINGS

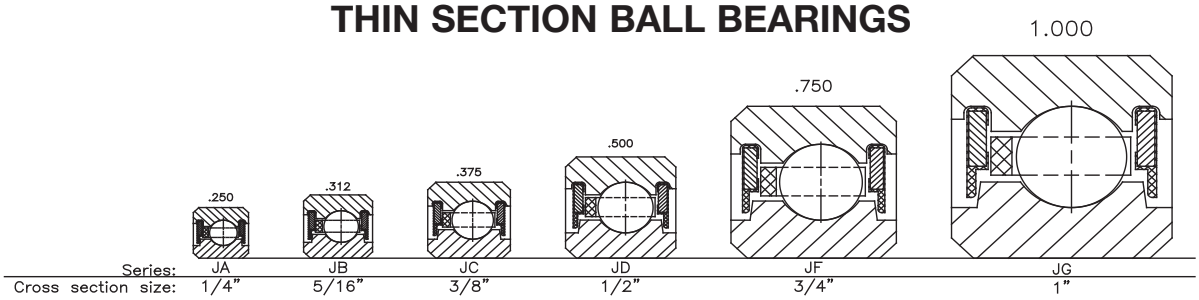

PART NUMBER*	NOMINAL DIMENSIONS												
	B Bore		D Outside Diameter		W Width		G_i Recess Diameter		M_o Groove Diameter		f_1 Housing Fillet		Ball Diameter
	in.	mm	in.	mm	in.	mm	in.	mm	in.	mm	in.	mm	in.
JC110CP0*RBC	11.0000	279.400	11.7500	298.450	0.3750	9.525	11.188	284.18	11.516	292.51	0.040	1.02	3/16
JD110CP0*RBC	11.0000	279.400	12.0000	304.800	0.5000	12.700	11.250	285.75	11.687	296.85	0.060	1.52	1/4
JF110CP0*RBC	11.0000	279.400	12.5000	317.500	0.7500	19.050	11.375	288.93	12.031	305.59	0.080	2.03	3/8
JG110CP0*RBC	11.0000	279.400	13.0000	330.200	1.0000	25.400	11.500	292.10	12.375	314.33	0.080	2.03	1/2
JA120CP0*RBC	12.0000	304.800	12.5000	317.500	0.2500	6.350	12.125	307.98	12.343	313.51	0.025	0.64	1/8
JB120CP0*RBC	12.0000	304.800	12.6250	320.675	0.3125	7.938	12.156	308.76	12.430	315.72	0.032	0.81	5/32
JC120CP0*RBC	12.0000	304.800	12.7500	323.850	0.3750	9.525	12.188	309.59	12.516	317.91	0.040	1.02	3/16
JD120CP0*RBC	12.0000	304.800	13.0000	330.200	0.5000	12.700	12.250	311.15	12.687	322.25	0.060	1.52	1/4
JF120CP0*RBC	12.0000	304.800	13.5000	342.900	0.7500	19.050	12.375	314.31	13.031	330.99	0.080	2.03	3/8
JG120CP0*RBC	12.0000	304.800	14.0000	355.600	1.0000	25.400	12.500	317.50	13.375	339.73	0.080	2.03	1/2

*The alphanumeric identification system is used under license.
Contact your RBC Sales Engineer for sizes above 12.00" Bore.

- 52100 Steel
- Large Diameter
- Light Weight
- Small Cross Section
- Snap-Over Ball Separator
- Sealed

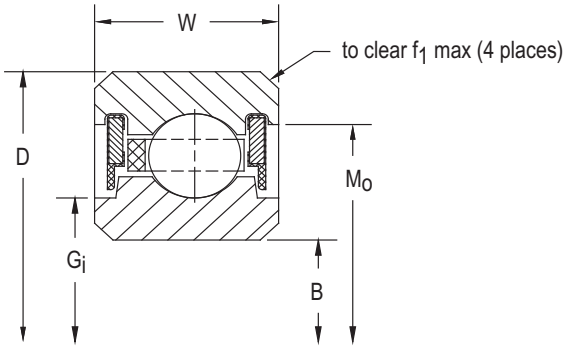

Ball Quantity	Approx. Weight		LOAD RATINGS												PART NUMBER*
			Radial				Thrust				Moment				
			Static		Dynamic		Static		Dynamic		Static		Dynamic		
	lbs.	kg	lbf	N	lbf	N	lbf	N	lbf	N	lbf - in	Nm	lbf - in	Nm	
91	1.16	0.526	5,470	24,330	1,879	8,360	N/A	N/A	N/A	N/A	N/A	N/A	N/A	N/A	**JC110CP0*RBC**
69	2.06	0.934	7,870	35,010	3,180	14,150	N/A	N/A	N/A	N/A	N/A	N/A	N/A	N/A	**JD110CP0*RBC**
47	4.80	2.177	13,260	58,980	5,833	25,950	N/A	N/A	N/A	N/A	N/A	N/A	N/A	N/A	**JF110CP0*RBC**
36	8.60	3.901	19,700	87,630	10,360	46,080	N/A	N/A	N/A	N/A	N/A	N/A	N/A	N/A	**JG110CP0*RBC**
147	0.56	0.254	3,720	16,550	1,078	4,800	N/A	N/A	N/A	N/A	N/A	N/A	N/A	N/A	**JA120CP0*RBC**
123	0.83	0.376	5,000	22,240	1,539	6,850	N/A	N/A	N/A	N/A	N/A	N/A	N/A	N/A	**JB120CP0*RBC**
99	1.25	0.567	5,950	26,470	1,974	8,780	N/A	N/A	N/A	N/A	N/A	N/A	N/A	N/A	**JC120CP0*RBC**
75	2.25	1.021	8,550	38,030	3,320	14,770	N/A	N/A	N/A	N/A	N/A	N/A	N/A	N/A	**JD120CP0*RBC**
51	5.20	2.359	14,390	64,010	6,105	27,160	N/A	N/A	N/A	N/A	N/A	N/A	N/A	N/A	**JF120CP0*RBC**
39	9.30	4.218	21,340	94,930	10,690	47,550	N/A	N/A	N/A	N/A	N/A	N/A	N/A	N/A	**JG120CP0*RBC**

Refer to the Engineering section for load and speed limitations.

SEALED (MOLDED) 4-POINT CONTACT, X-TYPE

THIN SECTION BALL BEARINGS

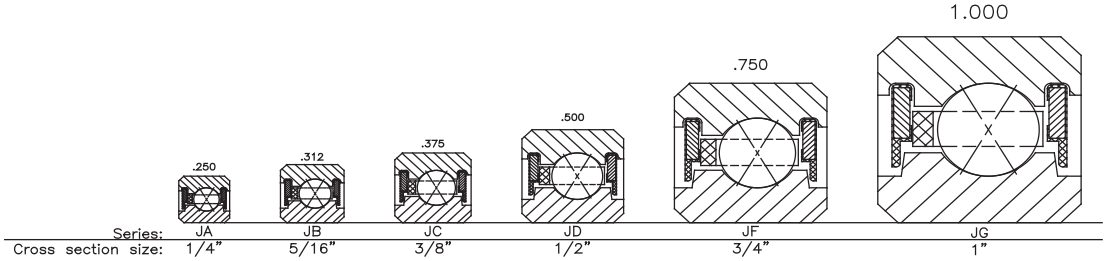

PART NUMBER*	NOMINAL DIMENSIONS												
	B Bore		D Outside Diameter		W Width		G_i Recess Diameter		M_o Groove Diameter		f_1 Housing Fillet		Ball Diameter
	in.	mm	in.	mm	in.	mm	in.	mm	in.	mm	in.	mm	in.
JA020XP0*RBC	2.0000	50.800	2.5000	63.500	0.2500	6.350	2.125	53.98	2.343	59.51	0.025	0.64	1/8
JB020XP0*RBC	2.0000	50.800	2.6250	66.675	0.3125	7.938	2.156	54.76	2.430	61.72	0.032	0.81	5/32
JA025XP0*RBC	2.5000	63.500	3.0000	76.200	0.2500	6.350	2.625	66.68	2.843	72.21	0.025	0.64	1/8
JB025XP0*RBC	2.5000	63.500	3.1250	79.375	0.3125	7.938	2.656	67.46	2.930	74.42	0.032	0.81	5/32
JA030XP0*RBC	3.0000	76.200	3.5000	88.900	0.2500	6.350	3.125	79.38	3.343	84.91	0.025	0.64	1/8
JB030XP0*RBC	3.0000	76.200	3.6250	92.075	0.3125	7.938	3.156	80.16	3.430	87.12	0.032	0.81	5/32
JA035XP0*RBC	3.5000	88.900	4.0000	101.600	0.2500	6.350	3.625	92.08	3.843	97.61	0.025	0.64	1/8
JB035XP0*RBC	3.5000	88.900	4.1250	104.775	0.3125	7.938	3.656	92.86	3.930	99.82	0.032	0.81	5/32
JA040XP0*RBC	4.0000	101.600	4.5000	114.300	0.2500	6.350	4.125	104.78	4.343	110.31	0.025	0.64	1/8
JB040XP0*RBC	4.0000	101.600	4.6250	117.475	0.3125	7.938	4.156	105.56	4.430	112.52	0.032	0.81	5/32
JC040XP0*RBC	4.0000	101.600	4.7500	120.650	0.3750	9.525	4.188	106.38	4.516	114.71	0.040	1.02	3/16
JD040XP0*RBC	4.0000	101.600	5.0000	127.000	0.5000	12.700	4.250	107.95	4.687	119.05	0.060	1.52	1/4
JF040XP0*RBC	4.0000	101.600	5.5000	139.700	0.7500	19.050	4.375	111.13	5.031	127.79	0.080	2.03	3/8
JG040XP0*RBC	4.0000	101.600	6.0000	152.400	1.0000	25.400	4.500	114.30	5.375	136.53	0.080	2.03	1/2
JA042XP0*RBC	4.2500	107.950	4.7500	120.650	0.2500	6.350	4.375	111.13	4.593	116.66	0.025	0.64	1/8
JB042XP0*RBC	4.2500	107.950	4.8750	123.825	0.3125	7.938	4.406	111.91	4.680	118.87	0.032	0.81	5/32
JC042XP0*RBC	4.2500	107.950	5.0000	127.000	0.3750	9.525	4.438	112.73	4.766	121.06	0.040	1.02	3/16
JD042XP0*RBC	4.2500	107.950	5.2500	133.350	0.5000	12.700	4.500	114.30	4.937	125.40	0.060	1.52	1/4
JF042XP0*RBC	4.2500	107.950	5.7500	146.050	0.7500	19.050	4.625	117.48	5.281	134.14	0.080	2.03	3/8
JG042XP0*RBC	4.2500	107.950	6.2500	158.750	1.0000	25.400	4.750	120.65	5.590	141.99	0.080	2.03	1/2
JA045XP0*RBC	4.5000	114.300	5.0000	127.000	0.2500	6.350	4.625	117.48	4.843	123.01	0.025	0.64	1/8
JB045XP0*RBC	4.5000	114.300	5.1250	130.175	0.3125	7.938	4.656	118.26	4.930	125.22	0.032	0.81	5/32
JC045XP0*RBC	4.5000	114.300	5.2500	133.350	0.3750	9.525	4.688	119.08	5.016	127.41	0.040	1.02	3/16
JD045XP0*RBC	4.5000	114.300	5.5000	139.700	0.5000	12.700	4.750	120.65	5.187	131.75	0.060	1.52	1/4
JF045XP0*RBC	4.5000	114.300	6.0000	152.400	0.7500	19.050	4.875	123.83	5.531	140.49	0.080	2.03	3/8
JG045XP0*RBC	4.5000	114.300	6.5000	165.100	1.0000	25.400	5.000	127.00	5.875	149.23	0.080	2.03	1/2
JA047XP0*RBC	4.7500	120.650	5.2500	133.350	0.2500	6.350	4.875	123.83	5.093	129.36	0.025	0.64	1/8
JB047XP0*RBC	4.7500	120.650	5.3750	136.525	0.3125	7.938	4.906	124.61	5.180	131.57	0.032	0.81	5/32
JC047XP0*RBC	4.7500	120.650	5.5000	139.700	0.3750	9.525	4.938	125.43	5.266	133.76	0.040	1.02	3/16
JD047XP0*RBC	4.7500	120.650	5.7500	146.050	0.5000	12.700	5.000	127.00	5.437	138.10	0.060	1.52	1/4
JF047XP0*RBC	4.7500	120.650	6.2500	158.750	0.7500	19.050	5.125	130.18	5.781	146.84	0.080	2.03	3/8
JG047XP0*RBC	4.7500	120.650	6.7500	171.450	1.0000	25.400	5.250	133.35	6.090	154.69	0.080	2.03	1/2
JA050XP0*RBC	5.0000	127.000	5.5000	139.700	0.2500	6.350	5.125	130.18	5.343	135.71	0.025	0.64	1/8
JB050XP0*RBC	5.0000	127.000	5.6250	142.875	0.3125	7.938	5.156	130.96	5.430	137.92	0.032	0.81	5/32
JC050XP0*RBC	5.0000	127.000	5.7500	146.050	0.3750	9.525	5.188	131.78	5.516	140.11	0.040	1.02	3/16
JD050XP0*RBC	5.0000	127.000	6.0000	152.400	0.5000	12.700	5.250	133.35	5.687	144.45	0.060	1.52	1/4
JF050XP0*RBC	5.0000	127.000	6.5000	165.100	0.7500	19.050	5.375	136.53	6.031	153.19	0.080	2.03	3/8
JG050XP0*RBC	5.0000	127.000	7.0000	177.800	1.0000	25.400	5.500	139.70	6.375	161.93	0.080	2.03	1/2
JA055XP0*RBC	5.5000	139.700	6.0000	152.400	0.2500	6.350	5.625	142.88	5.843	148.41	0.025	0.64	1/8
JB055XP0*RBC	5.5000	139.700	6.1250	155.575	0.3125	7.938	5.656	143.66	5.930	150.62	0.032	0.81	5/32
JC055XP0*RBC	5.5000	139.700	6.2500	158.750	0.3750	9.525	5.688	144.48	6.016	152.81	0.040	1.02	3/16
JD055XP0*RBC	5.5000	139.700	6.5000	165.100	0.5000	12.700	5.750	146.05	6.187	157.15	0.060	1.52	1/4
JF055XP0*RBC	5.5000	139.700	7.0000	177.800	0.7500	19.050	5.875	149.23	6.531	165.89	0.080	2.03	3/8
JG055XP0*RBC	5.5000	139.700	7.5000	190.500	1.0000	25.400	6.000	152.40	6.875	174.63	0.080	2.03	1/2

*The alphanumeric identification system is used under license.

- 52100 Steel
- Large Diameter
- Light Weight
- Small Cross Section
- Snap-Over Ball Separator
- Sealed

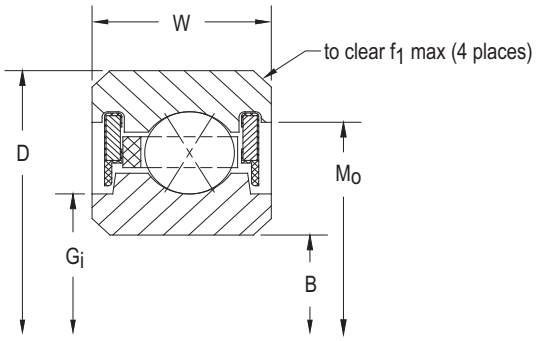

Ball Quantity	Approx. Weight lbs.	Approx. Weight kg	LOAD RATINGS Radial Static lbf	Radial Static N	Radial Dynamic lbf	Radial Dynamic N	Thrust Static lbf	Thrust Static N	Thrust Dynamic lbf	Thrust Dynamic N	Moment Static lbf - in	Moment Static Nm	Moment Dynamic lbf - in	Moment Dynamic Nm	PART NUMBER*
27	0.10	0.045	680	3,020	514	2,290	1,710	7,610	1,230	5,470	770	90	550	60	JA020XP0*RBC
23	0.16	0.073	930	4,140	758	3,370	2,340	10,410	1,740	7,740	1,080	120	800	90	JB020XP0*RBC
33	0.13	0.059	830	3,690	583	2,590	2,090	9,300	1,320	5,870	1,150	130	730	80	JA025XP0*RBC
28	0.20	0.091	1,140	5,070	848	3,770	2,840	12,630	1,880	8,360	1,600	180	1,060	120	JB025XP0*RBC
39	0.15	0.068	990	4,400	643	2,860	2,470	10,990	1,410	6,270	1,600	180	920	100	JA030XP0*RBC
33	0.24	0.109	1,340	5,960	933	4,150	3,350	14,900	1,990	8,850	2,220	250	1,320	150	JB030XP0*RBC
45	0.18	0.082	1,140	5,070	701	3,120	2,850	12,680	1,480	6,580	2,130	240	1,110	130	JA035XP0*RBC
38	0.27	0.122	1,540	6,850	1,014	4,510	3,860	17,170	2,100	9,340	2,940	330	1,600	180	JB035XP0*RBC
51	0.19	0.086	1,290	5,740	756	3,363	3,220	14,323	1,550	6,890	2,740	310	1,320	150	JA040XP0*RBC
43	0.30	0.136	1,750	7,780	1,091	4,850	4,370	19,440	2,210	9,830	3,770	430	1,900	210	JB040XP0*RBC
35	0.45	0.204	2,100	9,340	1,417	6,300	5,260	23,400	2,810	12,500	4,600	520	2,460	280	JC040XP0*RBC
27	0.78	0.354	3,080	13,700	2,311	10,280	7,700	34,250	4,890	21,750	6,930	780	4,400	500	JD040XP0*RBC
19	1.90	0.862	5,360	23,840	4,665	20,750	13,400	59,610	8,830	39,280	12,730	1,440	8,390	950	JF040XP0*RBC
15	3.60	1.633	8,210	36,520	7,979	35,490	20,520	91,280	15,150	67,390	20,520	2,320	15,150	1,710	JG040XP0*RBC
54	0.20	0.091	1,370	6,090	783	3,480	3,410	15,170	1,590	7.070	3,070	350	1,430	160	JA042XP0*RBC
45	0.31	0.141	1,830	8,140	1,120	4,980	4,570	20,330	2,230	9,920	4,170	470	2,040	230	JB042XP0*RBC
37	0.47	0.213	2,220	9,880	1,464	6,510	5,560	24,730	2,870	12,770	5,140	580	2,650	300	JC042XP0*RBC
28	0.83	0.376	3,190	14,190	2,355	10,480	7,980	35,500	4,920	21,890	7,580	860	4,670	530	JD042XP0*RBC
20	2.00	0.907	5,640	25,090	4,795	21,330	14,110	62,760	8,990	39,990	14,110	1,590	8,993	1,020	JF042XP0*RBC
15	3.80	1.724	8,210	36,520	7,917	35,220	20,520	91,280	15,150	67,390	21,550	2,430	15,910	1,800	JG042XP0*RBC
57	0.22	0.100	1,440	6,410	809	3,600	3,600	16,010	1,610	7,160	3,420	390	1,530	170	JA045XP0*RBC
48	0.33	0.150	1,950	8,670	1,165	5,180	4,880	21,710	2,300	10,230	4,690	530	2,220	250	JB045XP0*RBC
39	0.48	0.218	2,340	10,410	1,510	6,720	5,860	26,070	2,920	12,990	5,710	650	2,850	320	JC045XP0*RBC
30	0.88	0.399	3,420	15,210	2,454	10,920	8,550	38,030	5,080	22,600	8,550	970	5,080	570	JD045XP0*RBC
21	2.10	0.953	5,930	26,380	4,923	21,900	14,810	65,880	9,180	40,830	15,550	1,760	9,695	1,100	JF045XP0*RBC
16	4.00	1.814	8,760	38,970	8,205	36,500	21,890	97,370	15,820	70,370	24,080	2,720	17,400	1,970	JG045XP0*RBC
60	0.23	0.104	1,520	6,760	834	3,710	3,790	16,860	1,650	7,340	3,790	430	1,650	190	JA047XP0*RBC
50	0.34	0.154	2,030	9,030	1,193	5,310	5,080	22,600	2,310	10,280	5,140	580	2,340	260	JB047XP0*RBC
41	0.50	0.227	2,460	10,940	1,556	6,920	6,160	27,400	2,970	13,210	6,320	710	3,040	340	JC047XP0*RBC
31	0.94	0.426	3,530	15,700	2,496	11,100	8,840	39,320	5,130	22,820	9,280	1,050	5,380	610	JD047XP0*RBC
22	2.20	0.998	6,210	27,620	5,048	22,450	15,520	69,040	9,380	41,720	17,070	1,930	10,416	1,180	JF047XP0*RBC
17	4.10	1.860	9,300	41,370	8,487	37,750	23,260	103,470	16,470	73,260	26,740	3,020	18,940	2,140	JG047XP0*RBC
63	0.24	0.109	1,590	7,070	859	3,821	3,980	17,700	1,680	7,470	4,180	470	1,760	200	JA050XP0*RBC
53	0.38	0.172	2,150	9,560	1,236	5,500	5,380	23,930	2,380	10,590	5,720	650	2,520	280	JB050XP0*RBC
43	0.58	0.263	2,590	11,520	1,600	7,120	6,460	28,740	3,040	13,520	6,950	790	3,270	370	JC050XP0*RBC
33	1.00	0.454	3,760	16,730	2,592	11,530	9,410	41,860	5,270	23,440	10,350	1,170	5,800	660	JD050XP0*RBC
23	2.30	1.043	6,490	28,870	5,172	23,010	16,220	72,150	9,520	42,350	18,660	2,110	11,157	1,260	JF050XP0*RBC
18	4.30	1.950	9,850	43,810	8,762	38,980	24,620	109,520	17,110	76,110	29,550	3,340	20,530	2,320	JG050XP0*RBC
69	0.25	0.113	1,750	7,780	908	4,040	4,360	19,390	1,720	7,650	5,020	570	1,970	220	JA055XP0*RBC
58	0.41	0.186	2,360	10,500	1,304	5,800	5,890	26,200	2,460	10,940	6,850	770	2,860	320	JB055XP0*RBC
47	0.59	0.268	2,830	12,590	1,687	7,500	7,060	31,400	3,120	13,880	8,300	940	3,717	420	JC055XP0*RBC
36	1.06	0.481	4,100	18,240	2,725	12,120	10,260	45,640	5,450	24,240	12,310	1,390	6,540	740	JD055XP0*RBC
25	2.50	1.134	7,050	31,360	5,415	24,090	17,630	78,420	9,820	43,680	22,040	2,490	12,696	1,430	JF055XP0*RBC
19	4.70	2.132	10,400	46,260	8,979	39,940	25,990	115,610	17,460	77,670	33,790	3,820	22,700	2,560	JG055XP0*RBC

Refer to the Engineering section for load and speed limitations.

SEALED (MOLDED) 4-POINT CONTACT, X-TYPE

THIN SECTION BALL BEARINGS

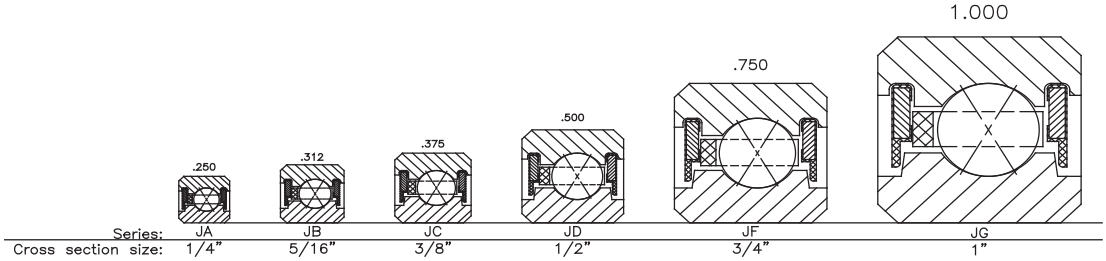

PART NUMBER*	NOMINAL DIMENSIONS												
	B Bore		D Outside Diameter		W Width		G_i Recess Diameter		M_o Groove Diameter		f_1 Housing Fillet		Ball Diameter
	in.	mm	in.	mm	in.	mm	in.	mm	in.	mm	in.	mm	in.
JA060XP0*RBC	6.0000	152.400	6.5000	165.100	0.2500	6.350	6.125	155.58	6.343	161.11	0.025	0.64	1/8
JB060XP0*RBC	6.0000	152.400	6.6250	168.275	0.3125	7.938	6.155	156.34	6.430	163.32	0.032	0.81	5/32
JC060XP0*RBC	6.0000	152.400	6.7500	171.450	0.3750	9.525	6.188	157.18	6.516	165.51	0.040	1.02	3/16
JD060XP0*RBC	6.0000	152.400	7.0000	177.800	0.5000	12.700	6.250	158.75	6.687	169.85	0.060	1.52	1/4
JF060XP0*RBC	6.0000	152.400	7.5000	190.500	0.7500	19.050	6.375	161.93	7.031	178.59	0.080	2.03	3/8
JG060XP0*RBC	6.0000	152.400	8.0000	203.200	1.0000	25.400	6.500	165.10	7.375	187.33	0.080	2.03	1/2
JA065XP0*RBC	6.5000	165.100	7.0000	177.800	0.2500	6.350	6.625	168.28	6.843	173.81	0.025	0.64	1/8
JB065XP0*RBC	6.5000	165.100	7.1250	180.975	0.3125	7.938	6.656	169.06	6.930	176.02	0.032	0.81	5/32
JC065XP0*RBC	6.5000	165.100	7.2500	184.150	0.3750	9.525	6.688	169.88	7.016	178.21	0.040	1.02	3/16
JD065XP0*RBC	6.5000	165.100	7.5000	190.500	0.5000	12.700	6.750	171.45	7.187	182.55	0.060	1.52	1/4
JF065XP0*RBC	6.5000	165.100	8.0000	203.200	0.7500	19.050	6.875	174.63	7.531	191.29	0.080	2.03	3/8
JG065XP0*RBC	6.5000	165.100	8.5000	215.900	1.0000	25.400	7.000	177.80	7.875	200.03	0.080	2.03	1/2
JA070XP0*RBC	7.0000	177.800	7.5000	190.500	0.2500	6.350	7.125	180.98	7.343	186.51	0.025	0.64	1/8
JB070XP0*RBC	7.0000	177.800	7.6250	193.675	0.3125	7.938	7.156	181.76	7.430	188.72	0.032	0.81	5/32
JC070XP0*RBC	7.0000	177.800	7.7500	196.850	0.3750	9.525	7.188	182.58	7.516	190.91	0.040	1.02	3/16
JD070XP0*RBC	7.0000	177.800	8.0000	203.200	0.5000	12.700	7.250	184.15	7.687	195.25	0.060	1.52	1/4
JF070XP0*RBC	7.0000	177.800	8.5000	215.900	0.7500	19.050	7.375	187.33	8.031	203.99	0.080	2.03	3/8
JG070XP0*RBC	7.0000	177.800	9.0000	228.600	1.0000	25.400	7.500	190.50	8.375	212.73	0.080	2.03	1/2
JA075XP0*RBC	7.5000	190.500	8.0000	203.200	0.2500	6.350	7.625	193.68	7.843	199.21	0.025	0.64	1/8
JB075XP0*RBC	7.5000	190.500	8.1250	206.375	0.3125	7.938	7.656	194.46	7.930	201.42	0.032	0.81	5/32
JC075XP0*RBC	7.5000	190.500	8.2500	209.550	0.3750	9.525	7.688	195.28	8.016	203.61	0.040	1.02	3/16
JD075XP0*RBC	7.5000	190.500	8.5000	215.900	0.5000	12.700	7.750	196.85	8.187	207.95	0.060	1.52	1/4
JF075XP0*RBC	7.5000	190.500	9.0000	228.600	0.7500	19.050	7.875	200.03	8.531	216.69	0.080	2.03	3/8
JG075XP0*RBC	7.5000	190.500	9.5000	241.300	1.0000	25.400	8.000	203.20	8.875	225.43	0.080	2.03	1/2
JA080XP0*RBC	8.0000	203.200	8.5000	215.900	0.2500	6.350	8.125	206.38	8.343	211.91	0.025	0.64	1/8
JB080XP0*RBC	8.0000	203.200	8.6250	219.075	0.3125	7.938	8.156	207.16	8.430	214.12	0.032	0.81	5/32
JC080XP0*RBC	8.0000	203.200	8.7500	222.250	0.3750	9.525	8.188	207.98	8.516	216.31	0.040	1.02	3/16
JD080XP0*RBC	8.0000	203.200	9.0000	228.600	0.5000	12.700	8.250	209.55	8.687	220.65	0.060	1.52	1/4
JF080XP0*RBC	8.0000	203.200	9.5000	241.300	0.7500	19.050	8.375	212.73	9.031	229.39	0.080	2.03	3/8
JG080XP0*RBC	8.0000	203.200	10.0000	254.000	1.0000	25.400	8.500	215.90	9.375	238.13	0.080	2.03	1/2
JA090XP0*RBC	9.0000	228.600	9.5000	241.300	0.2500	6.350	9.125	231.78	9.343	237.31	0.025	0.64	1/8
JB090XP0*RBC	9.0000	228.600	9.6250	244.475	0.3125	7.938	9.156	232.56	9.430	239.52	0.032	0.81	5/32
JC090XP0*RBC	9.0000	228.600	9.7500	247.650	0.3750	9.525	9.188	233.38	9.516	241.71	0.040	1.02	3/16
JD090XP0*RBC	9.0000	228.600	10.0000	254.000	0.5000	12.700	9.250	234.95	9.687	246.05	0.060	1.52	1/4
JF090XP0*RBC	9.0000	228.600	10.5000	266.700	0.7500	19.050	9.375	238.13	10.031	254.79	0.080	2.03	3/8
JG090XP0*RBC	9.0000	228.600	11.0000	279.400	1.0000	25.400	9.500	241.30	10.375	263.53	0.080	2.03	1/2
JA100XP0*RBC	10.0000	254.000	10.5000	266.700	0.2500	6.350	10.125	257.18	10.343	262.71	0.025	0.64	1/8
JB100XP0*RBC	10.0000	254.000	10.6250	269.875	0.3125	7.938	10.156	257.78	10.430	264.92	0.032	0.81	5/32
JC100XP0*RBC	10.0000	254.000	10.7500	273.050	0.3750	9.525	10.188	258.78	10.516	267.11	0.040	1.02	3/16
JD100XP0*RBC	10.0000	254.000	11.0000	279.400	0.5000	12.700	10.250	260.35	10.687	271.45	0.060	1.52	1/4
JF100XP0*RBC	10.0000	254.000	11.5000	292.100	0.7500	19.050	10.375	263.53	11.031	280.91	0.080	2.03	3/8
JG100XP0*RBC	10.0000	254.000	12.0000	304.800	1.0000	25.400	10.500	266.70	11.375	288.93	0.080	2.03	1/2
JA110XP0*RBC	11.0000	279.400	11.5000	292.100	0.2500	6.350	11.125	282.58	11.343	288.11	0.025	0.64	1/8
JB110XP0*RBC	11.0000	279.400	11.6250	295.275	0.3125	7.938	11.156	283.36	11.430	290.32	0.032	0.81	5/32

*The alphanumeric identification system is used under license.

- 52100 Steel
- Large Diameter
- Light Weight
- Small Cross Section
- Snap-Over Ball Separator
- Sealed

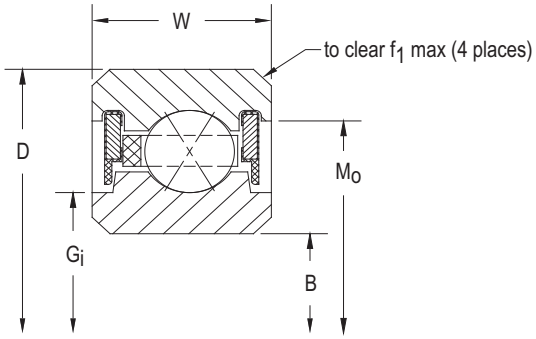

Ball Quantity	Approx. Weight lbs.	Approx. Weight kg	LOAD RATINGS Radial Static lbf	Radial Static N	Radial Dynamic lbf	Radial Dynamic N	Thrust Static lbf	Thrust Static N	Thrust Dynamic lbf	Thrust Dynamic N	Moment Static lbf - in	Moment Static Nm	Moment Dynamic lbf - in	Moment Dynamic Nm	PART NUMBER*
75	0.28	0.127	1,900	8,450	955	4,250	4,740	21,080	1,780	7.920	5,930	670	2,240	250	JA060XP0*RBC
63	0.44	0.200	2,560	11,390	1,371	6,100	6,400	28,470	2,540	11,300	8,080	910	3,247	370	JB060XP0*RBC
51	0.63	0.286	3,070	13,660	1,770	7,870	7,660	34,070	3,220	14,320	9,770	1,100	4,234	480	JC060XP0*RBC
39	1.16	0.526	4,450	19,790	2,855	12,700	11,120	49,460	5,610	24,950	14,450	1,630	7,290	820	JD060XP0*RBC
27	2.70	1.225	7,620	33,900	5,651	25,140	19,050	84,740	10,150	45,150	25,710	2,900	14,311	1,620	JF060XP0*RBC
21	5.10	2.313	11,490	51,110	9,503	42,270	28,730	127,800	18,290	81,360	40,220	4,540	25,610	2,890	JG060XP0*RBC
81	0.30	0.136	2,050	9,120	1,001	4,450	5,120	22,770	1,840	8.180	6,910	780	2,535	290	JA065XP0*RBC
68	0.47	0.213	2,760	12,280	1,435	6,380	6,910	30,740	2,590	11,520	9,410	1,060	3,668	410	JB065XP0*RBC
55	0.68	0.308	3,310	14,720	1,851	8,230	8,270	36,790	3,300	14,680	11,370	1,280	4,775	540	JC065XP0*RBC
42	1.22	0.553	4,790	21,310	2,980	13,260	11,970	53,250	5,740	25,530	16,760	1,890	8,040	910	JD065XP0*RBC
29	2.90	1.315	8,180	36,390	5,880	26,160	20,460	91,010	10,380	46,170	29,660	3,350	15,993	1,810	JF065XP0*RBC
22	5.40	2.449	12,040	53,560	9,713	43,210	30,100	133,890	18,520	82,380	45,140	5,100	27,770	3,140	JG065XP0*RBC
87	0.31	0.141	2,200	9,790	1,046	4,650	5,500	24,470	1,850	8,230	7,980	900	2,844	320	JA070XP0*RBC
73	0.50	0.227	2,970	13,210	1,498	6,660	7,420	33,010	2,660	11,830	10,850	1,230	4,109	460	JB070XP0*RBC
59	0.73	0.331	3,550	15,790	1,931	8,590	8,870	39,460	3,420	15,210	13,080	1,480	5,341	600	JC070XP0*RBC
45	1.31	0.594	5,130	22,820	3,103	13,800	12,830	57,070	5,880	26,160	19,240	2,170	8,810	1,000	JD070XP0*RBC
31	3.20	1.451	8,750	38,920	6,103	27,150	21,870	97,280	10,640	47,330	33,890	3,830	17,744	2,000	JF070XP0*RBC
24	5.80	2.631	13,130	58,410	10,208	45,410	32,830	146,040	19,330	85,980	52,530	5,940	30,930	3,490	JG070XP0*RBC
93	0.34	0.154	2,350	10,450	1,089	4,840	5,880	26,160	1,890	8,410	9,120	1,030	3,165	360	JA075XP0*RBC
78	0.53	0.240	3,170	14,100	1,559	6,930	7,920	35,230	2,730	12,140	12,380	1,400	4,568	520	JB075XP0*RBC
63	0.78	0.354	3,790	16,860	2,007	8,930	9,470	42,120	3,480	15,480	14,910	1,680	5,930	670	JC075XP0*RBC
48	1.41	0.640	5,470	24,330	3,222	14,330	13,680	60,850	6,060	26,960	21,890	2,470	9,700	1,100	JD075XP0*RBC
33	3.40	1.542	9,310	41,410	6,323	28,130	23,280	103,550	10,930	48,620	38,410	4,340	19,568	2,210	JF075XP0*RBC
25	6.10	2.767	13,680	60,850	10,410	46,310	34,200	152,130	19,460	86,560	58,140	6,570	33,196	3,750	JG075XP0*RBC
99	0.38	0.172	2,500	11,120	1,131	5,030	6,260	27,850	1,970	8,760	10,330	1,170	3,499	400	JA080XP0*RBC
83	0.57	0.259	3,370	14,990	1,618	7,200	8,430	37,500	2,790	12,410	14,020	1,580	5,045	570	JB080XP0*RBC
67	0.84	0.381	4,030	17,930	2,082	9,260	10,070	44,790	3,560	15,840	16,870	1,910	6,542	740	JC080XP0*RBC
51	1.53	0.694	5,810	25,840	3,338	14,850	14,540	64,680	6,170	27,450	24,710	2,790	10,643	1,200	JD080XP0*RBC
35	3.50	1.588	9,880	43,950	6,535	29,070	24,690	109,830	11,190	49,780	43,200	4,880	21,453	2,420	JF080XP0*RBC
27	6.50	2.948	14,770	65,700	10,882	48,410	36,940	164,320	20,230	89,990	66,480	7,510	36,743	4,150	JG080XP0*RBC
111	0.44	0.200	2,810	12,500	1,212	5,390	7,020	31,230	2,040	9,070	12,990	1,470	4,204	470	JA090XP0*RBC
93	0.66	0.299	3,780	16,810	1,732	7,700	9,450	42,040	2,890	12,860	17,600	1,990	6,050	680	JB090XP0*RBC
75	0.94	0.426	4,510	20,060	2,226	9,900	11,270	50,130	3,690	16,410	21,130	2,390	7,830	880	JC090XP0*RBC
57	1.72	0.780	6,500	28,910	3,561	15,840	16,250	72,280	6,410	28,510	30,870	3,490	12,693	1,430	JD090XP0*RBC
39	3.90	1.769	11,000	48,930	6,947	30,900	27,510	122,370	11,630	51,730	53,640	6,060	25,410	2,870	JF090XP0*RBC
30	7.20	3.266	16,420	73,040	11,526	51,270	41,040	182,560	21,020	93,500	82,080	9,270	43,240	4,890	JG090XP0*RBC
123	0.50	0.227	3,110	13,830	1,289	5,730	7,780	34,610	2,180	9,700	15,940	1,800	4,956	560	JA100XP0*RBC
103	0.73	0.331	4,190	18,640	1,841	8,190	10,460	46,530	3,080	13,700	21,580	2,440	7,121	800	JB100XP0*RBC
83	1.06	0.481	4,990	22,200	2,364	10,520	12,470	55,470	3,930	17,480	25,880	2,920	9,201	1,040	JC100XP0*RBC
63	1.88	0.853	7,180	31,940	3,776	16,800	17,960	79,890	6,680	29,710	37,710	4,260	14,872	1,680	JD100XP0*RBC
43	4.30	1.950	12,130	53,960	7,342	32,660	30,330	134,910	12,100	53,820	65,210	7,370	29,608	3,350	JF100XP0*RBC
33	7.90	3.583	18,060	80,330	12,147	54,030	45,140	200,790	21,790	96,930	99,320	11,220	50,124	5,660	JG100XP0*RBC
135	0.52	0.236	3,410	15,170	1,362	6,060	8,540	37,990	2,320	10,320	19,210	2,170	5,750	650	JA110XP0*RBC
113	0.75	0.340	4,590	20,420	1,945	8,650	11,480	51,070	3,280	14,590	25,970	2,930	8,254	930	JB110XP0*RBC

Refer to the Engineering section for load and speed limitations.

SEALED (MOLDED) 4-POINT CONTACT, X-TYPE

THIN SECTION BALL BEARINGS

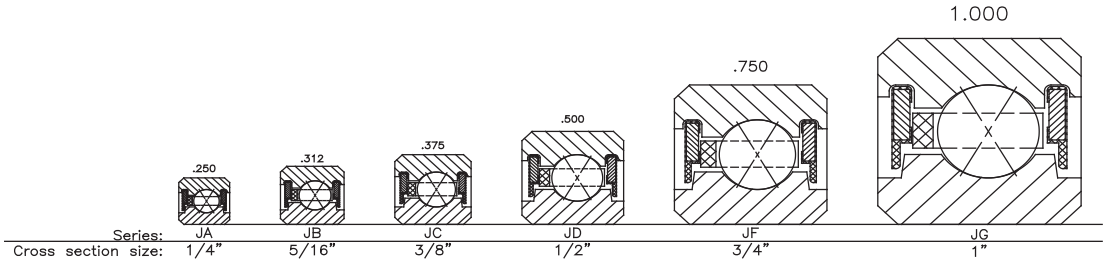

PART NUMBER*	NOMINAL DIMENSIONS												
	B Bore		D Outside Diameter		W Width		G_i Recess Diameter		M_o Groove Diameter		f_1 Housing Fillet		Ball Diameter
	in.	mm	in.	mm	in.	mm	in.	mm	in.	mm	in.	mm	
JC110XP0*RBC	11.0000	279.400	11.7500	298.450	0.3750	9.525	11.188	284.18	11.516	292.51	0.040	1.02	3/16
JD110XP0*RBC	11.0000	279.400	12.0000	304.800	0.5000	12.700	11.250	285.75	11.687	296.85	0.060	1.52	1/4
JF110XP0*RBC	11.0000	279.400	12.5000	317.500	0.7500	19.050	11.375	288.93	12.031	305.59	0.080	2.03	3/8
JG110XP0*RBC	11.0000	279.400	13.0000	330.200	1.0000	25.400	11.500	292.10	12.375	314.33	0.080	2.03	1/2
JA120XP0*RBC	12.0000	304.800	12.5000	317.500	0.2500	6.350	12.125	307.98	12.343	313.51	0.025	0.64	1/8
JB120XP0*RBC	12.0000	304.800	12.6250	320.675	0.3125	7.938	12.156	308.76	12.430	315.72	0.032	0.81	5/32
JC120XP0*RBC	12.0000	304.800	12.7500	323.850	0.3750	9.525	12.188	309.58	12.516	317.91	0.040	1.02	3/16
JD120XP0*RBC	12.0000	304.800	13.0000	330.200	0.5000	12.700	12.250	311.15	12.687	322.25	0.060	1.52	1/4
JF120XP0*RBC	12.0000	304.800	13.5000	342.900	0.7500	19.050	12.375	314.31	13.031	330.99	0.080	2.03	3/8
JG120XP0*RBC	12.0000	304.800	14.0000	355.600	1.0000	25.400	12.500	317.50	13.375	339.73	0.080	2.03	1/2

*The alphanumeric identification system is used under license.
Contact your RBC Sales Engineer for sizes above 12.00" Bore.

- 52100 Steel
- Large Diameter
- Light Weight
- Small Cross Section
- Snap-Over Ball Separator
- Sealed

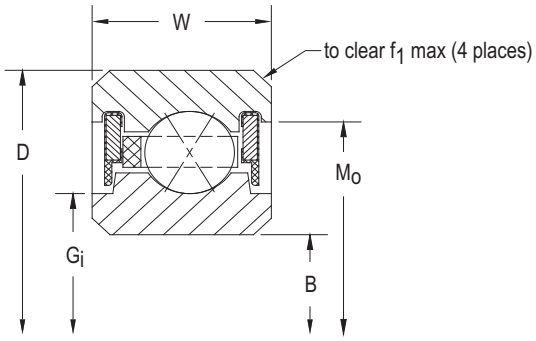

Ball Quantity	Approx. Weight		LOAD RATINGS												PART NUMBER*
			Radial				Thrust				Moment				
			Static		Dynamic		Static		Dynamic		Static		Dynamic		
	lbs.	kg	lbf	N	lbf	N	lbf	N	lbf	N	lbf - in	Nm	lbf - in	Nm	
91	1.16	0.526	5,470	24,330	2,496	11,100	13,680	60,850	4,180	18,590	31,110	3,510	10,651	1,200	**JC110XP0*RBC**
69	2.06	0.934	7,870	35,010	3,981	17,710	19,670	87,500	6,830	30,380	45,230	5,110	17,173	1,940	**JD110XP0*RBC**
47	4.80	2.177	13,260	58,980	7,721	34,340	33,150	147,460	12,490	55,560	77,910	8,800	34,032	3,850	**JF110XP0*RBC**
36	8.60	3.901	19,700	87,630	12,739	56,670	49,250	219,070	22,530	100,220	118,200	13,350	57,347	6,480	**JG110XP0*RBC**
147	0.56	0.254	3,720	16,550	1,433	6,370	9,300	41,370	2,450	10,900	22,770	2,570	6,587	740	**JA120XP0*RBC**
123	0.83	0.376	5,000	22,240	2,045	9,100	12,500	55,600	3,470	15,440	30,770	3,480	9,446	1,070	**JB120XP0*RBC**
99	1.25	0.567	5,950	26,470	2,622	11,660	14,880	66,190	4,420	19,660	36,830	4,160	12,174	1,380	**JC120XP0*RBC**
75	2.25	1.021	8,550	38,030	4,178	18,580	21,380	95,100	7,080	31,490	53,440	6,040	19,590	2,210	**JD120XP0*RBC**
51	5.20	2.359	14,390	64,010	8,084	35,960	35,970	160,000	13,190	58,670	91,730	10,360	38,666	4,370	**JF120XP0*RBC**
39	9.30	4.218	21,340	94,930	13,315	59,230	53,350	237,310	23,180	103,110	138,700	15,670	64,935	7,340	**JG120XP0*RBC**

Refer to the Engineering section for load and speed limitations.

SEALED (MOLDED) RADIAL CONTACT C-TYPE

THIN SECTION BALL BEARINGS

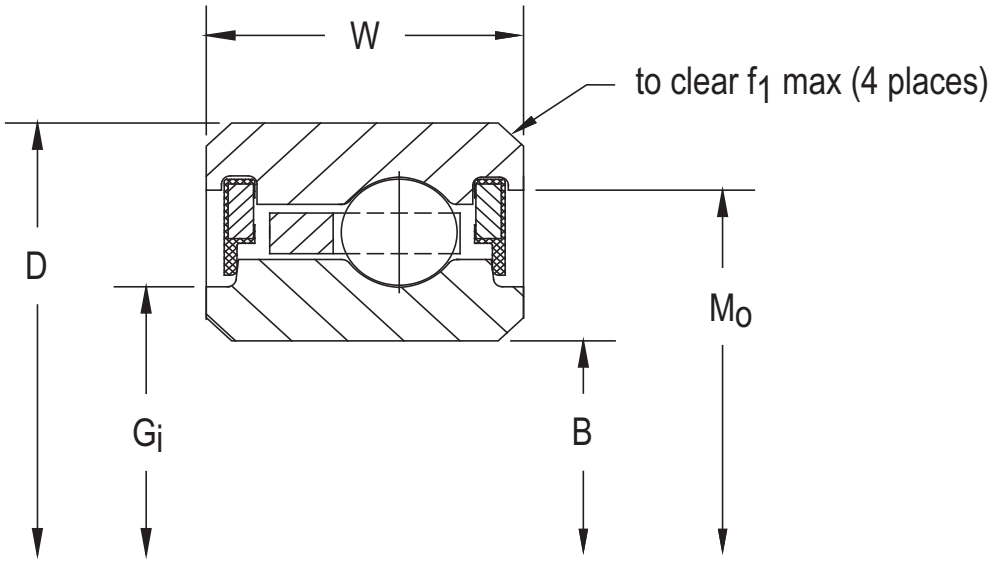

PART NUMBER*	NOMINAL DIMENSIONS												
	B Bore		D Outside Diameter		W Width		G_i Recess Diameter		M_o Groove Diameter		f_1 Housing Fillet		Ball Diameter
	in.	mm	in.	mm	in.	mm	in.	mm	in.	mm	in.	mm	in.
JHA10CL0*RBC	1.0000	25.400	1.3750	34.925	0.250	6.350	1.093	27.762	1.260	32.004	0.015	0.38	3/32
JHA15CL0*RBC	1.5000	38.100	1.8750	47.625	0.250	6.350	1.593	40.462	1.760	44.704	0.015	0.38	3/32
JHA17CL0*RBC	1.7500	44.450	2.1250	53.975	0.250	6.350	1.843	46.812	2.010	51.054	0.015	0.38	3/32

*The alphanumeric identification system is used under license.

- 52100 Steel
- Large Diameter
- Light Weight
- Small Cross Section
- Snap-Over Ball Separator
- Sealed

	Ball Quantity	Approx. Weight		LOAD RATINGS												PART NUMBER*
				Radial				Thrust				Moment				
				Static		Dynamic		Static		Dynamic		Static		Dynamic		
		lbs.	kg	lbf	N	lbf	N	lbf	N	lbf	N	lbf - in	Nm	lbf - in	Nm	
	22	0.035	0.016	290	1,290	300	1,330	N/A	N/A	N/A	N/A	N/A	N/A	N/A	N/A	**JHA10CL0*RBC**
	30	0.052	0.024	400	1,780	350	1,560	N/A	N/A	N/A	N/A	N/A	N/A	N/A	N/A	**JHA15CL0*RBC**
	33	0.060	0.027	460	2,050	371	1,650	N/A	N/A	N/A	N/A	N/A	N/A	N/A	N/A	**JHA17CL0*RBC**

Refer to the Engineering section for load and speed limitations.

SEALED (MOLDED) 4-POINT CONTACT, X-TYPE

THIN SECTION BALL BEARINGS

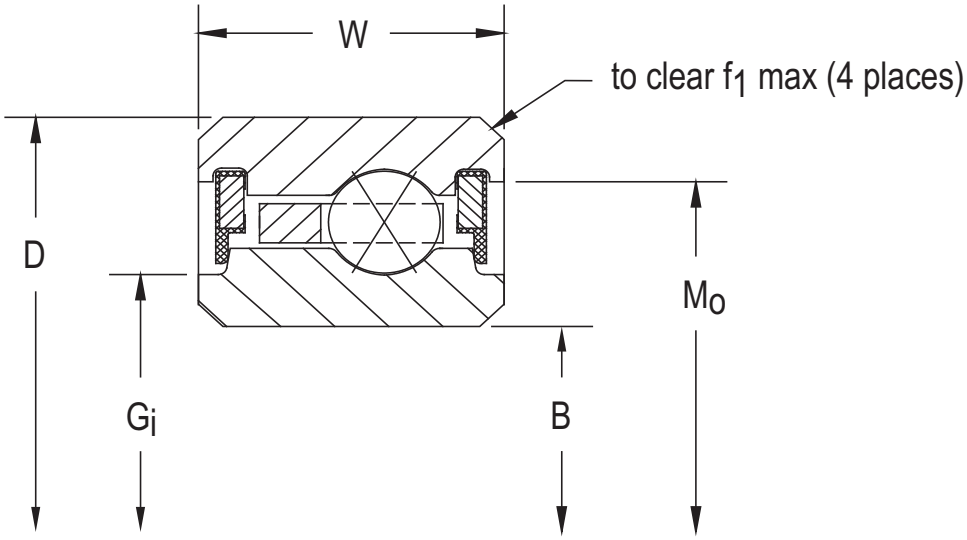

PART NUMBER*	NOMINAL DIMENSIONS												
	B Bore		D Outside Diameter		W Width		G_i Recess Diameter		M_o Groove Diameter		f_1 Housing Fillet		Ball Diameter
	in.	mm	in.	mm	in.	mm	in.	mm	in.	mm	in.	mm	in.
JHA10XL0*RBC	1.0000	25.400	1.3750	34.925	0.250	6.350	1.093	27.762	1.260	32.004	0.015	0.38	3/32
JHA15XL0*RBC	1.5000	38.100	1.8750	47.625	0.250	6.350	1.593	40.462	1.760	44.704	0.015	0.38	3/32
JHA17XL0*RBC	1.7500	44.450	2.1250	53.975	0.250	6.350	1.843	46.812	2.010	51.054	0.015	0.38	3/32

*The alphanumeric identification system is used under license.

- 52100 Steel
- Large Diameter
- Light Weight
- Small Cross Section
- Snap-Over Ball Separator
- Sealed

	Ball Quantity	Approx. Weight		LOAD RATINGS												PART NUMBER*
				Radial				Thrust				Moment				
				Static		Dynamic		Static		Dynamic		Static		Dynamic		
		lbs.	kg	lbf	N	lbf	N	lbf	N	lbf	N	lbf - in	Nm	lbf - in	Nm	
	22	0.035	0.016	290	1,290	270	1,200	730	3,250	680	3,020	170	20	160	20	**JHA10XL0*RBC**
	30	0.052	0.024	400	1,780	301	1,380	1,000	4,450	770	3,430	340	40	260	30	**JHA15XL0*RBC**
	33	0.060	0.027	460	2,050	322	1,430	1,140	5,070	805	3,580	555	63	405	46	**JHA17XL0*RBC**

Refer to the Engineering section for load and speed limitations.

SEALED (MOLDED) RADIAL CONTACT, C-TYPE JU-SERIES

THIN SECTION BALL BEARINGS

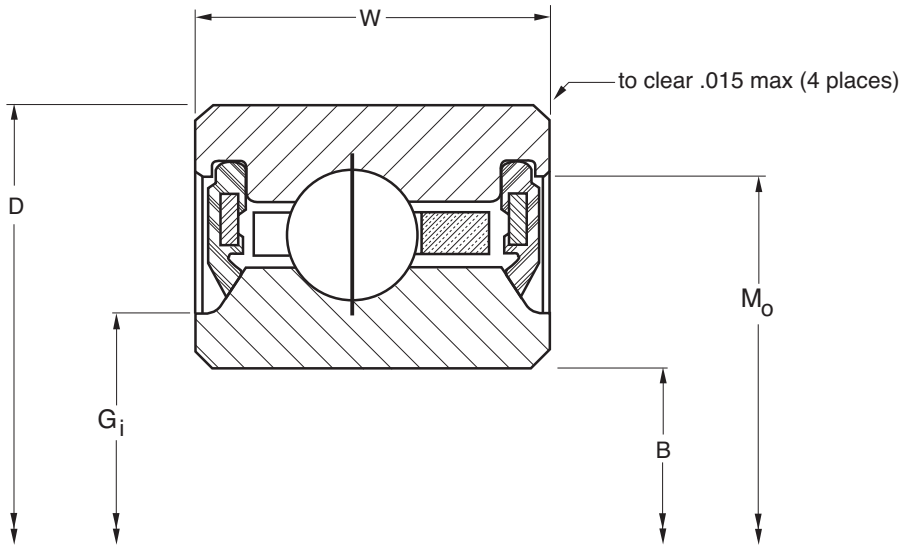

PART NUMBER*	NOMINAL DIMENSIONS											
	B Bore		D Outside Diameter		W Width		G_i Recess Diameter		M_o Groove Diameter		Ball Diameter	Ball Quantity
	in.	mm	in.	mm	in.	mm	in.	mm	in.	mm	in.	
JU040CP0*RBC	4.0000	101.600	4.7500	120.650	0.5000	12.700	4.155	105.54	4.550	115.57	3/16	35
JU042CP0*RBC	4.2500	107.950	5.0000	127.000	0.5000	12.700	4.405	111.89	4.800	121.92	3/16	37
JU045CP0*RBC	4.5000	114.300	5.2500	133.350	0.5000	12.700	4.655	118.24	5.050	128.27	3/16	39
JU047CP0*RBC	4.7500	120.650	5.5000	139.700	0.5000	12.700	4.905	124.59	5.300	134.62	3/16	41
JU050CP0*RBC	5.0000	127.000	5.7500	146.050	0.5000	12.700	5.155	130.94	5.550	140.97	3/16	43
JU055CP0*RBC	5.5000	139.700	6.2500	158.750	0.5000	12.700	5.655	143.64	6.050	153.67	3/16	47
JU060CP0*RBC	6.0000	152.400	6.7500	171.450	0.5000	12.700	6.155	156.34	6.550	166.37	3/16	51
JU065CP0*RBC	6.5000	165.100	7.2500	184.150	0.5000	12.700	6.655	169.04	7.050	179.07	3/16	55
JU070CP0*RBC	7.0000	177.800	7.7500	196.850	0.5000	12.700	7.155	181.74	7.550	191.77	3/16	59
JU075CP0*RBC	7.5000	190.500	8.2500	209.550	0.5000	12.700	7.655	194.44	8.050	204.47	3/16	63
JU080CP0*RBC	8.0000	203.200	8.7500	222.250	0.5000	12.700	8.155	207.14	8.550	217.17	3/16	67
JU090CP0*RBC	9.0000	228.600	9.7500	247.650	0.5000	12.700	9.155	232.54	9.550	242.57	3/16	75
JU100CP0*RBC	10.0000	254.000	10.7500	273.050	0.5000	12.700	10.155	257.94	10.550	267.97	3/16	83
JU110CP0*RBC	11.0000	279.400	11.7500	298.450	0.5000	12.700	11.155	283.34	11.550	293.37	3/16	91
JU120CP0*RBC	12.0000	304.800	12.7500	323.850	0.5000	12.700	12.155	308.74	12.550	318.77	3/16	99

*The alphanumeric identification system is used under license.

- 52100 Steel
- Large Diameter
- Light Weight
- Small Cross Section
- Snap-Over Ball Separator
- Sealed

Approx. Weight		LOAD RATINGS												PART NUMBER*
		Radial				Thrust				Moment				
		Static		Dynamic		Static		Dynamic		Static		Dynamic		
lbs.	kg	lbf	N	lbf	N	lbf	N	lbf	N	lbf - in	Nm	lbf - in	Nm	
0.55	0.249	2,100	9,340	1,290	5,740	N/A	N/A	N/A	N/A	N/A	N/A	N/A	N/A	JU040CP0*RBC
0.58	0.263	2,220	9,880	1,320	5,870	N/A	N/A	N/A	N/A	N/A	N/A	N/A	N/A	JU042CP0*RBC
0.61	0.277	2,340	10,410	1,350	6,010	N/A	N/A	N/A	N/A	N/A	N/A	N/A	N/A	JU045CP0*RBC
0.65	0.295	2,460	10,940	1,370	6,090	N/A	N/A	N/A	N/A	N/A	N/A	N/A	N/A	JU047CP0*RBC
0.68	0.308	2,590	11,520	1,390	6,180	N/A	N/A	N/A	N/A	N/A	N/A	N/A	N/A	JU050CP0*RBC
0.74	0.336	2,830	12,590	1,440	6,410	N/A	N/A	N/A	N/A	N/A	N/A	N/A	N/A	JU055CP0*RBC
0.81	0.367	3,070	13,660	1,490	6,630	N/A	N/A	N/A	N/A	N/A	N/A	N/A	N/A	JU060CP0*RBC
0.87	0.395	3,310	14,720	1,530	6,810	N/A	N/A	N/A	N/A	N/A	N/A	N/A	N/A	JU065CP0*RBC
0.93	0.422	3,550	15,790	1,570	6,980	N/A	N/A	N/A	N/A	N/A	N/A	N/A	N/A	JU070CP0*RBC
0.99	0.449	3,790	16,860	1,600	7,120	N/A	N/A	N/A	N/A	N/A	N/A	N/A	N/A	JU075CP0*RBC
1.06	0.481	4,030	17,930	1,650	7,340	N/A	N/A	N/A	N/A	N/A	N/A	N/A	N/A	JU080CP0*RBC
1.18	0.535	4,510	20,060	1,730	7,700	N/A	N/A	N/A	N/A	N/A	N/A	N/A	N/A	JU090CP0*RBC
1.31	0.594	4,990	22,200	1,781	7,920	N/A	N/A	N/A	N/A	N/A	N/A	N/A	N/A	JU100CP0*RBC
1.43	0.649	5,470	24,330	1,879	8,360	N/A	N/A	N/A	N/A	N/A	N/A	N/A	N/A	JU110CP0*RBC
1.56	0.708	5,950	26,470	1,974	8,780	N/A	N/A	N/A	N/A	N/A	N/A	N/A	N/A	JU120CP0*RBC

Refer to the Engineering section for load and speed limitations.

SEALED (MOLDED) 4-POINT CONTACT, X-TYPE

THIN SECTION BALL BEARINGS

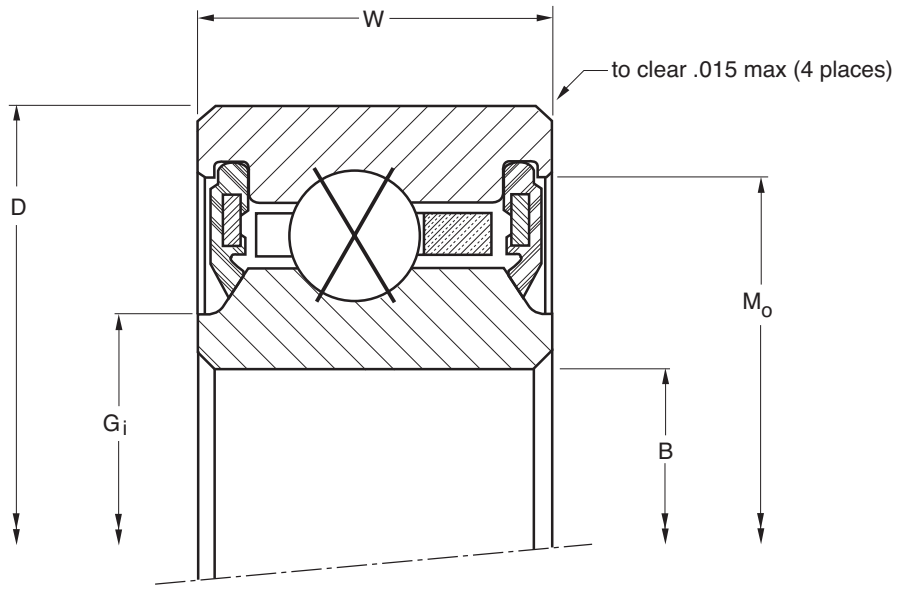

PART NUMBER*	NOMINAL DIMENSIONS											
	B Bore		D Outside Diameter		W Width		G_i Recess Diameter		M_o Groove Diameter		Ball Diameter	Ball Quantity
	in.	mm	in.	mm	in.	mm	in.	mm	in.	mm	in.	
JU040XP0*RBC	4.0000	101.600	4.7500	120.650	0.5000	12.700	4.155	105.54	4.550	115.57	3/16	35
JU042XP0*RBC	4.2500	107.950	5.0000	127.000	0.5000	12.700	4.405	111.89	4.800	121.92	3/16	37
JU045XP0*RBC	4.5000	114.300	5.2500	133.350	0.5000	12.700	4.655	118.24	5.050	128.27	3/16	39
JU047XP0*RBC	4.7500	120.650	5.5000	139.700	0.5000	12.700	4.905	124.59	5.300	134.62	3/16	41
JU050XP0*RBC	5.0000	127.000	5.7500	146.050	0.5000	12.700	5.155	130.94	5.550	140.97	3/16	43
JU055XP0*RBC	5.5000	139.700	6.2500	158.750	0.5000	12.700	5.655	143.64	6.050	153.67	3/16	47
JU060XP0*RBC	6.0000	152.400	6.7500	171.450	0.5000	12.700	6.155	156.34	6.550	166.37	3/16	51
JU065XP0*RBC	6.5000	165.100	7.2500	184.150	0.5000	12.700	6.655	169.04	7.050	179.07	3/16	55
JU070XP0*RBC	7.0000	177.800	7.7500	196.850	0.5000	12.700	7.155	181.74	7.550	191.77	3/16	59
JU075XP0*RBC	7.5000	190.500	8.2500	209.550	0.5000	12.700	7.655	194.44	8.050	204.47	3/16	63
JU080XP0*RBC	8.0000	203.200	8.7500	222.250	0.5000	12.700	8.155	207.14	8.550	217.17	3/16	67
JU090XP0*RBC	9.0000	228.600	9.7500	247.650	0.5000	12.700	9.155	232.54	9.550	242.57	3/16	75
JU100XP0*RBC	10.0000	254.000	10.7500	273.050	0.5000	12.700	10.155	257.94	10.550	267.97	3/16	83
JU110XP0*RBC	11.0000	279.400	11.7500	298.450	0.5000	12.700	11.155	283.34	11.550	293.37	3/16	91
JU120XP0*RBC	12.0000	304.800	12.7500	323.850	0.5000	12.700	12.155	308.74	12.550	318.77	3/16	99

*The alphanumeric identification system is used under license.

- 52100 Steel
- Large Diameter
- Light Weight
- Small Cross Section
- Snap-Over Ball Separator
- Sealed

Approx. Weight		LOAD RATINGS												PART NUMBER*
		Radial				Thrust				Moment				
		Static		Dynamic		Static		Dynamic		Static		Dynamic		
lbs.	kg	lbf	N	lbf	N	lbf	N	lbf	N	lbf - in	Nm	lbf - in	Nm	
0.55	0.249	2,100	9,340	1,417	6,300	5,260	23,400	2,810	12,500	4,600	520	2,460	280	**JU040XP0*RBC**
0.58	0.263	2,220	9,880	1,464	6,510	5,560	24,730	2,870	12,770	5,140	580	2,650	300	**JU042XP0*RBC**
0.61	0.277	2,340	10,410	1,510	6,720	5,860	26,070	2,920	12,990	5,710	650	2,850	320	**JU045XP0*RBC**
0.65	0.295	2,460	10,940	1,556	6,920	6,160	27,400	2,970	13,210	6,320	710	3,040	340	**JU047XP0*RBC**
0.68	0.308	2,590	11,520	1,600	7,120	6,460	28,740	3,040	13,520	6,950	790	3,270	370	**JU050XP0*RBC**
0.74	0.336	2,830	12,590	1,687	7,500	7,060	31,400	3,120	13,880	8,300	940	3,717	420	**JU055XP0*RBC**
0.81	0.367	3,070	13,660	1,770	7,870	7,660	34,070	3,220	14,320	9,770	1,100	4,234	480	**JU060XP0*RBC**
0.87	0.395	3,310	14,720	1,851	8,230	8,270	36,790	3,300	14,680	11,370	1,280	4,775	540	**JU065XP0*RBC**
0.93	0.422	3,550	15,790	1,931	8,590	8,870	39,460	3,420	15,210	13,080	1,480	5,341	600	**JU070XP0*RBC**
0.99	0.449	3,790	16,860	2,007	8,930	9,470	42,120	3,480	15,480	14,910	1,680	5,930	670	**JU075XP0*RBC**
1.06	0.481	4,030	17,930	2,082	9,260	10,070	44,790	3,560	15,840	16,870	1,910	6,542	740	**JU080XP0*RBC**
1.18	0.535	4,510	20,060	2,226	9,900	11,270	50,130	3,690	16,410	21,130	2,390	7,830	880	**JU090XP0*RBC**
1.31	0.594	4,990	22,200	2,364	10,520	12,470	55,470	3,930	17,480	25,880	2,920	9,201	1,040	**JU100XP0*RBC**
1.43	0.649	5,470	24,330	2,496	11,100	13,680	60,850	4,180	18,590	31,110	3,510	10,651	1,200	**JU110XP0*RBC**
1.56	0.708	5,950	26,470	2,622	11,660	14,880	66,190	4,420	19,660	36,830	4,160	12,174	1,380	**JU120XP0*RBC**

Refer to the Engineering section for load and speed limitations.

SEALED (COMBO) RADIAL CONTACT, C-TYPE

THIN SECTION BALL BEARINGS

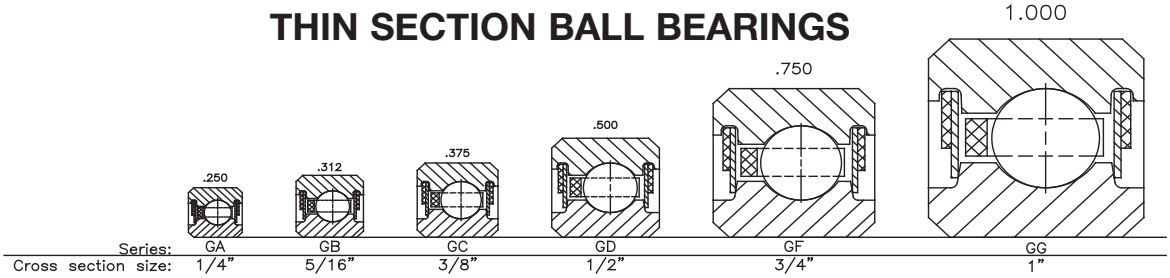

PART NUMBER*	NOMINAL DIMENSIONS												
	B Bore		D Outside Diameter		W Width		G_i Recess Diameter		M_o Groove Diameter		f_1 Housing Fillet		Ball Diameter
	in.	mm	in.	mm	in.	mm	in.	mm	in.	mm	in.	mm	in.
GA020CP0*RBC	2.0000	50.800	2.5000	63.500	0.2500	6.350	2.125	53.98	2.343	59.51	0.025	0.64	1/8
GB020CP0*RBC	2.0000	50.800	2.6250	66.675	0.3125	7.938	2.156	54.76	2.430	61.72	0.032	0.81	5/32
GA025CP0*RBC	2.5000	63.500	3.0000	76.200	0.2500	6.350	2.625	66.68	2.843	72.21	0.025	0.64	1/8
GB025CP0*RBC	2.5000	63.500	3.1250	79.375	0.3125	7.938	2.656	67.46	2.930	74.42	0.032	0.81	5/32
GA030CP0*RBC	3.0000	76.200	3.5000	88.900	0.2500	6.350	3.125	79.38	3.343	84.91	0.025	0.64	1/8
GB030CP0*RBC	3.0000	76.200	3.6250	92.075	0.3125	7.938	3.156	80.16	3.430	87.12	0.032	0.81	5/32
GA035CP0*RBC	3.5000	88.900	4.0000	101.600	0.2500	6.350	3.625	92.08	3.843	97.61	0.025	0.64	1/8
GB035CP0*RBC	3.5000	88.900	4.1250	104.775	0.3125	7.938	3.656	92.86	3.930	99.82	0.032	0.81	5/32
GA040CP0*RBC	4.0000	101.600	4.5000	114.300	0.2500	6.350	4.125	104.78	4.343	110.31	0.025	0.64	1/8
GB040CP0*RBC	4.0000	101.600	4.6250	117.475	0.3125	7.938	4.156	105.56	4.430	112.52	0.032	0.81	5/32
GC040CP0*RBC	4.0000	101.600	4.7500	120.650	0.3750	9.525	4.188	106.38	4.516	114.71	0.040	1.02	3/16
GD040CP0*RBC	4.0000	101.600	5.0000	127.000	0.5000	12.700	4.250	107.95	4.687	119.05	0.060	1.52	1/4
GF040CP0*RBC	4.0000	101.600	5.5000	139.700	0.7500	19.050	4.375	111.13	5.031	127.79	0.080	2.03	3/8
GG040CP0*RBC	4.0000	101.600	6.0000	152.400	1.0000	25.400	4.500	114.30	5.375	136.53	0.080	2.03	1/2
GA042CP0*RBC	4.2500	107.950	4.7500	120.650	0.2500	6.350	4.375	111.13	4.593	116.66	0.025	0.64	1/8
GB042CP0*RBC	4.2500	107.950	4.8750	123.825	0.3125	7.938	4.406	111.91	4.680	118.87	0.032	0.81	5/32
GC042CP0*RBC	4.2500	107.950	5.0000	127.000	0.3750	9.525	4.438	112.73	4.766	121.06	0.040	1.02	3/16
GD042CP0*RBC	4.2500	107.950	5.2500	133.350	0.5000	12.700	4.500	114.30	4.937	125.40	0.060	1.52	1/4
GF042CP0*RBC	4.2500	107.950	5.7500	146.050	0.7500	19.050	4.625	117.48	5.281	134.14	0.080	2.03	3/8
GG042CP0*RBC	4.2500	107.950	6.2500	158.750	1.0000	25.400	4.750	120.65	5.590	141.99	0.080	2.03	1/2
GA045CP0*RBC	4.5000	114.300	5.0000	127.000	0.2500	6.350	4.625	117.48	4.843	123.01	0.025	0.64	1/8
GB045CP0*RBC	4.5000	114.300	5.1250	130.175	0.3125	7.938	4.656	118.26	4.930	125.22	0.032	0.81	5/32
GC045CP0*RBC	4.5000	114.300	5.2500	133.350	0.3750	9.525	4.688	119.08	5.016	127.41	0.040	1.02	3/16
GD045CP0*RBC	4.5000	114.300	5.5000	139.700	0.5000	12.700	4.750	120.65	5.187	131.75	0.060	1.52	1/4
GF045CP0*RBC	4.5000	114.300	6.0000	152.400	0.7500	19.050	4.875	123.83	5.531	140.49	0.080	2.03	3/8
GG045CP0*RBC	4.5000	114.300	6.5000	165.100	1.0000	25.400	5.000	127.00	5.875	149.23	0.080	2.03	1/2
GA047CP0*RBC	4.7500	120.650	5.2500	133.350	0.2500	6.350	4.875	123.83	5.093	129.36	0.025	0.64	1/8
GB047CP0*RBC	4.7500	120.650	5.3750	136.525	0.3125	7.938	4.906	124.61	5.180	131.57	0.032	0.81	5/32
GC047CP0*RBC	4.7500	120.650	5.5000	139.700	0.3750	9.525	4.938	125.43	5.266	133.76	0.040	1.02	3/16
GD047CP0*RBC	4.7500	120.650	5.7500	146.050	0.5000	12.700	5.000	127.00	5.437	138.10	0.060	1.52	1/4
GF047CP0*RBC	4.7500	120.650	6.2500	158.750	0.7500	19.050	5.125	130.18	5.781	146.84	0.080	2.03	3/8
GG047CP0*RBC	4.7500	120.650	6.7500	171.450	1.0000	25.400	5.250	133.35	6.090	154.69	0.080	2.03	1/2
GA050CP0*RBC	5.0000	127.000	5.5000	139.700	0.2500	6.350	5.125	130.18	5.343	135.71	0.025	0.64	1/8
GB050CP0*RBC	5.0000	127.000	5.6250	142.875	0.3125	7.938	5.156	130.96	5.430	137.92	0.032	0.81	5/32
GC050CP0*RBC	5.0000	127.000	5.7500	146.050	0.3750	9.525	5.188	131.78	5.516	140.11	0.040	1.02	3/16
GD050CP0*RBC	5.0000	127.000	6.0000	152.400	0.5000	12.700	5.250	133.35	5.687	144.45	0.060	1.52	1/4
GF050CP0*RBC	5.0000	127.000	6.5000	165.100	0.7500	19.050	5.375	136.53	6.031	153.19	0.080	2.03	3/8
GG050CP0*RBC	5.0000	127.000	7.0000	177.800	1.0000	25.400	5.500	139.70	6.375	161.93	0.080	2.03	1/2
GA055CP0*RBC	5.5000	139.700	6.0000	152.400	0.2500	6.350	5.625	142.88	5.843	148.41	0.025	0.64	1/8
GB055CP0*RBC	5.5000	139.700	6.1250	155.575	0.3125	7.938	5.656	143.66	5.930	150.62	0.032	0.81	5/32
GC055CP0*RBC	5.5000	139.700	6.2500	158.750	0.3750	9.525	5.688	144.48	6.016	152.81	0.040	1.02	3/16
GD055CP0*RBC	5.5000	139.700	6.5000	165.100	0.5000	12.700	5.750	146.05	6.187	157.15	0.060	1.52	1/4
GF055CP0*RBC	5.5000	139.700	7.0000	177.800	0.7500	19.050	5.875	149.23	6.531	165.89	0.080	2.03	3/8
GG055CP0*RBC	5.5000	139.700	7.5000	190.500	1.0000	25.400	6.000	152.40	6.875	174.63	0.080	2.03	1/2

*The alphanumeric identification system is used under license.

- 52100 Steel
- Large Diameter
- Light Weight
- Small Cross Section
- Snap-Over Ball Separator
- Shielded Seals

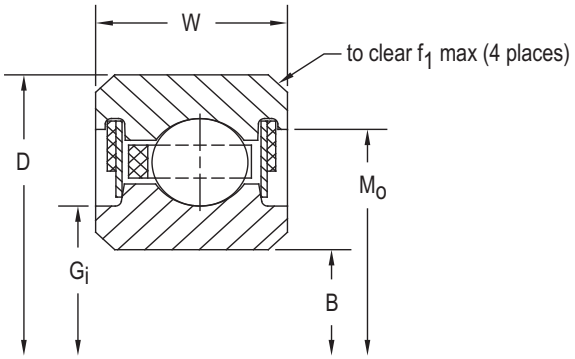

Ball Quantity	Approx. Weight		LOAD RATINGS												PART NUMBER*
			Radial				Thrust				Moment				
			Static		Dynamic		Static		Dynamic		Static		Dynamic		
	lbs.	kg	lbf	N	lbf	N	lbf	N	lbf	N	lbf - in	Nm	lbf - in	Nm	
27	0.10	0.045	680	3,020	560	2,490	N/A	N/A	N/A	N/A	N/A	N/A	N/A	N/A	GA020CP0*RBC
23	0.16	0.073	930	4,140	800	3,560	N/A	N/A	N/A	N/A	N/A	N/A	N/A	N/A	GB020CP0*RBC
33	0.13	0.059	830	3,692	610	2,710	N/A	N/A	N/A	N/A	N/A	N/A	N/A	N/A	GA025CP0*RBC
28	0.20	0.091	1,140	5,070	860	3,830	N/A	N/A	N/A	N/A	N/A	N/A	N/A	N/A	GB025CP0*RBC
39	0.15	0.068	990	4,404	650	2,890	N/A	N/A	N/A	N/A	N/A	N/A	N/A	N/A	GA030CP0*RBC
33	0.24	0.109	1,340	5,960	920	4,090	N/A	N/A	N/A	N/A	N/A	N/A	N/A	N/A	GB030CP0*RBC
45	0.18	0.082	1,140	5,070	690	3,070	N/A	N/A	N/A	N/A	N/A	N/A	N/A	N/A	GA035CP0*RBC
38	0.27	0.122	1,540	6,850	970	4,310	N/A	N/A	N/A	N/A	N/A	N/A	N/A	N/A	GB035CP0*RBC
51	0.19	0.086	1,290	5,740	720	3,200	N/A	N/A	N/A	N/A	N/A	N/A	N/A	N/A	GA040CP0*RBC
43	0.30	0.136	1,750	7,780	1,020	4,540	N/A	N/A	N/A	N/A	N/A	N/A	N/A	N/A	GB040CP0*RBC
35	0.45	0.204	2,100	9,340	1,290	5,740	N/A	N/A	N/A	N/A	N/A	N/A	N/A	N/A	GC040CP0*RBC
27	0.78	0.354	3,080	13,700	2,250	10,010	N/A	N/A	N/A	N/A	N/A	N/A	N/A	N/A	GD040CP0*RBC
19	1.90	0.862	5,360	23,840	3,940	17,530	N/A	N/A	N/A	N/A	N/A	N/A	N/A	N/A	GF040CP0*RBC
15	3.60	1.633	8,210	36,520	6,700	29,800	N/A	N/A	N/A	N/A	N/A	N/A	N/A	N/A	GG040CP0*RBC
54	0.20	0.091	1,370	6,010	730	3,250	N/A	N/A	N/A	N/A	N/A	N/A	N/A	N/A	GA042CP0*RBC
45	0.31	0.141	1,830	8,140	1,030	4,580	N/A	N/A	N/A	N/A	N/A	N/A	N/A	N/A	GB042CP0*RBC
37	0.47	0.213	2,220	9,880	1,320	5,870	N/A	N/A	N/A	N/A	N/A	N/A	N/A	N/A	GC042CP0*RBC
28	0.83	0.376	3,190	14,190	2,270	10,100	N/A	N/A	N/A	N/A	N/A	N/A	N/A	N/A	GD042CP0*RBC
20	2.00	0.907	5,640	25,090	4,070	18,100	N/A	N/A	N/A	N/A	N/A	N/A	N/A	N/A	GF042CP0*RBC
15	3.80	1.724	8,210	36,520	6,700	29,800	N/A	N/A	N/A	N/A	N/A	N/A	N/A	N/A	GG042CP0*RBC
57	0.22	0.100	1,440	6,410	750	3,340	N/A	N/A	N/A	N/A	N/A	N/A	N/A	N/A	GA045CP0*RBC
48	0.33	0.150	1,950	8,670	1,060	4,720	N/A	N/A	N/A	N/A	N/A	N/A	N/A	N/A	GB045CP0*RBC
39	0.48	0.218	2,340	10,410	1,350	6,010	N/A	N/A	N/A	N/A	N/A	N/A	N/A	N/A	GC045CP0*RBC
30	0.88	0.399	3,420	15,210	2,350	10,450	N/A	N/A	N/A	N/A	N/A	N/A	N/A	N/A	GD045CP0*RBC
21	2.10	0.953	5,930	26,380	4,210	18,730	N/A	N/A	N/A	N/A	N/A	N/A	N/A	N/A	GF045CP0*RBC
16	4.00	1.814	8,760	38,970	7,000	31,140	N/A	N/A	N/A	N/A	N/A	N/A	N/A	N/A	GG045CP0*RBC
60	0.23	0.104	1,520	6,760	760	3,380	N/A	N/A	N/A	N/A	N/A	N/A	N/A	N/A	GA047CP0*RBC
50	0.34	0.154	2,030	9,030	1,070	4,760	N/A	N/A	N/A	N/A	N/A	N/A	N/A	N/A	GB047CP0*RBC
41	0.50	0.227	2,460	10,940	1,370	6,090	N/A	N/A	N/A	N/A	N/A	N/A	N/A	N/A	GC047CP0*RBC
31	0.94	0.426	3,530	15,700	2,360	10,500	N/A	N/A	N/A	N/A	N/A	N/A	N/A	N/A	GD047CP0*RBC
22	2.20	0.998	6,210	27,620	4,310	19,170	N/A	N/A	N/A	N/A	N/A	N/A	N/A	N/A	GF047CP0*RBC
17	4.10	1.860	9,300	41,370	7,290	32,430	N/A	N/A	N/A	N/A	N/A	N/A	N/A	N/A	GG047CP0*RBC
63	0.24	0.109	1,590	7,070	770	3,430	N/A	N/A	N/A	N/A	N/A	N/A	N/A	N/A	GA050CP0*RBC
53	0.38	0.172	2,150	9,560	1,100	4,890	N/A	N/A	N/A	N/A	N/A	N/A	N/A	N/A	GB050CP0*RBC
43	0.58	0.263	2,590	11,520	1,390	6,180	N/A	N/A	N/A	N/A	N/A	N/A	N/A	N/A	GC050CP0*RBC
33	1.00	0.454	3,760	16,730	2,430	10,810	N/A	N/A	N/A	N/A	N/A	N/A	N/A	N/A	GD050CP0*RBC
23	2.30	1.043	6,490	28,870	4,380	19,480	N/A	N/A	N/A	N/A	N/A	N/A	N/A	N/A	GF050CP0*RBC
18	4.30	1.950	9,850	43,810	7,570	33,670	N/A	N/A	N/A	N/A	N/A	N/A	N/A	N/A	GG050CP0*RBC
69	0.25	0.113	1,750	7,780	800	3,560	N/A	N/A	N/A	N/A	N/A	N/A	N/A	N/A	GA055CP0*RBC
58	0.41	0.186	2,360	10,500	1,130	5,030	N/A	N/A	N/A	N/A	N/A	N/A	N/A	N/A	GB055CP0*RBC
47	0.59	0.268	2,830	12,590	1,440	6,410	N/A	N/A	N/A	N/A	N/A	N/A	N/A	N/A	GC055CP0*RBC
36	1.06	0.481	4,100	18,240	2,510	11,170	N/A	N/A	N/A	N/A	N/A	N/A	N/A	N/A	GD055CP0*RBC
25	2.50	1.134	7,050	31,360	4,540	20,190	N/A	N/A	N/A	N/A	N/A	N/A	N/A	N/A	GF055CP0*RBC
19	4.70	2.132	10,400	46,260	7,850	34,920	N/A	N/A	N/A	N/A	N/A	N/A	N/A	N/A	GG055CP0*RBC

Refer to the Engineering section for load and speed limitations.

SEALED (COMBO) RADIAL CONTACT, C-TYPE

THIN SECTION BALL BEARINGS

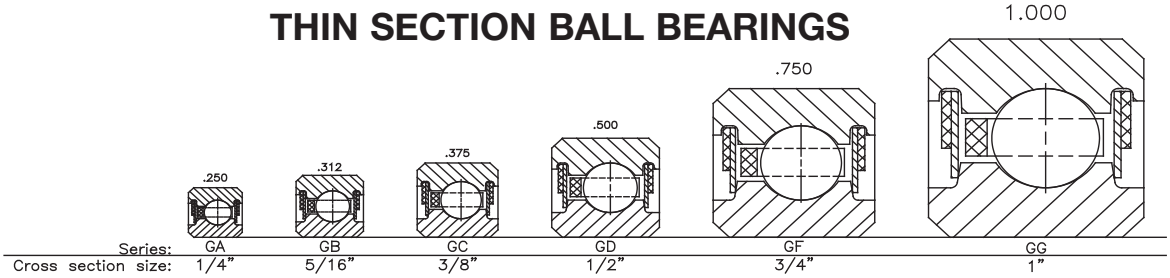

PART NUMBER*	NOMINAL DIMENSIONS												
	B Bore		D Outside Diameter		W Width		G_i Recess Diameter		M_o Groove Diameter		f_1 Housing Fillet		Ball Diameter
	in.	mm	in.	mm	in.	mm	in.	mm	in.	mm	in.	mm	in.
GA060CP0*RBC	6.0000	152.400	6.5000	165.100	0.2500	6.350	6.125	155.58	6.343	161.11	0.025	0.64	1/8
GB060CP0*RBC	6.0000	152.400	6.6250	168.275	0.3125	7.938	6.155	156.34	6.430	163.32	0.032	0.81	5/32
GC060CP0*RBC	6.0000	152.400	6.7500	171.450	0.3750	9.525	6.188	157.18	6.516	165.51	0.040	1.02	3/16
GD060CP0*RBC	6.0000	152.400	7.0000	177.800	0.5000	12.700	6.250	158.75	6.687	169.85	0.060	1.52	1/4
GF060CP0*RBC	6.0000	152.400	7.5000	190.500	0.7500	19.050	6.375	161.93	7.031	178.59	0.080	2.03	3/8
GG060CP0*RBC	6.0000	152.400	8.0000	203.200	1.0000	25.400	6.500	165.10	7.375	187.33	0.080	2.03	1/2
GA065CP0*RBC	6.5000	165.100	7.0000	177.800	0.2500	6.350	6.625	168.28	6.843	173.81	0.025	0.64	1/8
GB065CP0*RBC	6.5000	165.100	7.1250	180.975	0.3125	7.938	6.656	169.06	6.930	176.02	0.032	0.81	5/32
GC065CP0*RBC	6.5000	165.100	7.2500	184.150	0.3750	9.525	6.688	169.88	7.016	178.21	0.040	1.02	3/16
GD065CP0*RBC	6.5000	165.100	7.5000	190.500	0.5000	12.700	6.750	171.45	7.187	182.55	0.060	1.52	1/4
GF065CP0*RBC	6.5000	165.100	8.0000	203.200	0.7500	19.050	6.875	174.63	7.531	191.29	0.080	2.03	3/8
GG065CP0*RBC	6.5000	165.100	8.5000	215.900	1.0000	25.400	7.000	177.80	7.875	200.03	0.080	2.03	1/2
GA070CP0*RBC	7.0000	177.800	7.5000	190.500	0.2500	6.350	7.125	180.98	7.343	186.51	0.025	0.64	1/8
GB070CP0*RBC	7.0000	177.800	7.6250	193.675	0.3125	7.938	7.156	181.76	7.430	188.72	0.032	0.81	5/32
GC070CP0*RBC	7.0000	177.800	7.7500	196.850	0.3750	9.525	7.188	182.58	7.516	190.91	0.040	1.02	3/16
GD070CP0*RBC	7.0000	177.800	8.0000	203.200	0.5000	12.700	7.250	184.15	7.687	195.25	0.060	1.52	1/4
GF070CP0*RBC	7.0000	177.800	8.5000	215.900	0.7500	19.050	7.375	187.33	8.031	203.99	0.080	2.03	3/8
GG070CP0*RBC	7.0000	177.800	9.0000	228.600	1.0000	25.400	7.500	190.50	8.375	212.73	0.080	2.03	1/2
GA075CP0*RBC	7.5000	190.500	8.0000	203.200	0.2500	6.350	7.625	193.68	7.843	199.21	0.025	0.64	1/8
GB075CP0*RBC	7.5000	190.500	8.1250	206.375	0.3125	7.938	7.656	194.46	7.930	201.42	0.032	0.81	5/32
GC075CP0*RBC	7.5000	190.500	8.2500	209.550	0.3750	9.525	7.688	195.28	8.016	203.61	0.040	1.02	3/16
GD075CP0*RBC	7.5000	190.500	8.5000	215.900	0.5000	12.700	7.750	196.85	8.187	207.95	0.060	1.52	1/4
GF075CP0*RBC	7.5000	190.500	9.0000	228.600	0.7500	19.050	7.875	200.03	8.531	216.69	0.080	2.03	3/8
GG075CP0*RBC	7.5000	190.500	9.5000	241.300	1.0000	25.400	8.000	203.20	8.875	225.43	0.080	2.03	1/2
GA080CP0*RBC	8.0000	203.200	8.5000	215.900	0.2500	6.350	8.125	206.38	8.343	211.91	0.025	0.64	1/8
GB080CP0*RBC	8.0000	203.200	8.6250	219.075	0.3125	7.938	8.156	207.16	8.430	214.12	0.032	0.81	5/32
GC080CP0*RBC	8.0000	203.200	8.7500	222.250	0.3750	9.525	8.188	207.98	8.516	216.31	0.040	1.02	3/16
GD080CP0*RBC	8.0000	203.200	9.0000	228.600	0.5000	12.700	8.250	209.55	8.687	220.65	0.060	1.52	1/4
GF080CP0*RBC	8.0000	203.200	9.5000	241.300	0.7500	19.050	8.375	212.73	9.031	229.39	0.080	2.03	3/8
GG080CP0*RBC	8.0000	203.200	10.0000	254.000	1.0000	25.400	8.500	215.90	9.375	238.13	0.080	2.03	1/2
GA090CP0*RBC	9.0000	228.600	9.5000	241.300	0.2500	6.350	9.125	231.78	9.343	237.31	0.025	0.64	1/8
GB090CP0*RBC	9.0000	228.600	9.6250	244.475	0.3125	7.938	9.156	232.56	9.430	239.52	0.032	0.81	5/32
GC090CP0*RBC	9.0000	228.600	9.7500	247.650	0.3750	9.525	9.188	233.38	9.516	241.71	0.040	1.02	3/16
GD090CP0*RBC	9.0000	228.600	10.0000	254.000	0.5000	12.700	9.250	234.95	9.687	246.05	0.060	1.52	1/4
GF090CP0*RBC	9.0000	228.600	10.5000	266.700	0.7500	19.050	9.375	238.13	10.031	254.79	0.080	2.03	3/8
GG090CP0*RBC	9.0000	228.600	11.0000	279.400	1.0000	25.400	9.500	241.30	10.375	263.53	0.080	2.03	1/2
GA100CP0*RBC	10.0000	254.000	10.5000	266.700	0.2500	6.350	10.125	257.18	10.343	262.71	0.025	0.64	1/8
GB100CP0*RBC	10.0000	254.000	10.6250	269.875	0.3125	7.938	10.156	257.96	10.430	264.92	0.032	0.81	5/32
GC100CP0*RBC	10.0000	254.000	10.7500	273.050	0.3750	9.525	10.188	258.78	10.516	267.11	0.040	1.02	3/16
GD100CP0*RBC	10.0000	254.000	11.0000	279.400	0.5000	12.700	10.250	260.35	10.687	271.45	0.060	1.52	1/4
GF100CP0*RBC	10.0000	254.000	11.5000	292.100	0.7500	19.050	10.375	263.53	11.031	280.91	0.080	2.03	3/8
GG100CP0*RBC	10.0000	254.000	12.0000	304.800	1.0000	25.400	10.500	266.70	11.375	288.93	0.080	2.03	1/2
GA110CP0*RBC	11.0000	279.400	11.5000	292.100	0.2500	6.350	11.125	282.58	11.343	288.11	0.025	0.64	1/8
GB110CP0*RBC	11.0000	279.400	11.6250	295.275	0.3125	7.938	11.156	283.36	11.430	290.32	0.032	0.81	5/32

*The alphanumeric identification system is used under license.

- 52100 Steel
- Large Diameter
- Light Weight
- Small Cross Section
- Snap-Over Ball Separator
- Shielded Seals

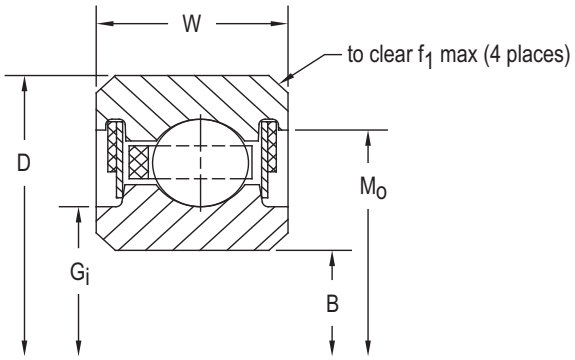

Ball Quantity	Approx. Weight		LOAD RATINGS												PART NUMBER*
			Radial				Thrust				Moment				
			Static		Dynamic		Static		Dynamic		Static		Dynamic		
	lbs.	kg	lbf	N	lbf	N	lbf	N	lbf	N	lbf - in	Nm	lbf - in	Nm	
75	0.28	0.127	1,900	8,450	830	3,690	N/A	N/A	N/A	N/A	N/A	N/A	N/A	N/A	GA060CP0*RBC
63	0.44	0.200	2,560	11,390	1,170	5,200	N/A	N/A	N/A	N/A	N/A	N/A	N/A	N/A	GB060CP0*RBC
51	0.63	0.286	3,070	13,660	1,490	6,630	N/A	N/A	N/A	N/A	N/A	N/A	N/A	N/A	GC060CP0*RBC
39	1.16	0.526	4,450	19,790	2,580	11,480	N/A	N/A	N/A	N/A	N/A	N/A	N/A	N/A	GD060CP0*RBC
27	2.70	1.225	7,620	33,900	4,660	20,730	N/A	N/A	N/A	N/A	N/A	N/A	N/A	N/A	GF060CP0*RBC
21	5.10	2.313	11,490	51,110	8,390	37,320	N/A	N/A	N/A	N/A	N/A	N/A	N/A	N/A	GG060CP0*RBC
81	0.30	0.136	2,050	9,120	850	3,780	N/A	N/A	N/A	N/A	N/A	N/A	N/A	N/A	GA065CP0*RBC
68	0.47	0.213	2,760	12,280	1,200	5,340	N/A	N/A	N/A	N/A	N/A	N/A	N/A	N/A	GB065CP0*RBC
55	0.68	0.308	3,310	14,720	1,530	6,810	N/A	N/A	N/A	N/A	N/A	N/A	N/A	N/A	GC065CP0*RBC
42	1.22	0.553	4,790	21,310	2,650	11,790	N/A	N/A	N/A	N/A	N/A	N/A	N/A	N/A	GD065CP0*RBC
29	2.90	1.315	8,180	36,390	4,790	21,310	N/A	N/A	N/A	N/A	N/A	N/A	N/A	N/A	GF065CP0*RBC
22	5.40	2.449	12,040	53,560	8,520	37,900	N/A	N/A	N/A	N/A	N/A	N/A	N/A	N/A	GG065CP0*RBC
87	0.31	0.141	2,200	9,790	870	3,870	N/A	N/A	N/A	N/A	N/A	N/A	N/A	N/A	GA070CP0*RBC
73	0.50	0.227	2,970	13,210	1,240	5,520	N/A	N/A	N/A	N/A	N/A	N/A	N/A	N/A	GB070CP0*RBC
59	0.73	0.331	3,550	15,790	1,570	6,980	N/A	N/A	N/A	N/A	N/A	N/A	N/A	N/A	GC070CP0*RBC
45	1.31	0.594	5,130	22,820	2,730	12,140	N/A	N/A	N/A	N/A	N/A	N/A	N/A	N/A	GD070CP0*RBC
31	3.20	1.451	8,750	38,920	4,920	21,890	N/A	N/A	N/A	N/A	N/A	N/A	N/A	N/A	GF070CP0*RBC
24	5.80	2.631	13,130	58,410	8,880	39,500	N/A	N/A	N/A	N/A	N/A	N/A	N/A	N/A	GG070CP0*RBC
93	0.34	0.154	2,350	10,450	890	3,960	N/A	N/A	N/A	N/A	N/A	N/A	N/A	N/A	GA075CP0*RBC
78	0.53	0.240	3,170	14,100	1,280	5,690	N/A	N/A	N/A	N/A	N/A	N/A	N/A	N/A	GB075CP0*RBC
63	0.78	0.354	3,790	16,860	1,600	7,120	N/A	N/A	N/A	N/A	N/A	N/A	N/A	N/A	GC075CP0*RBC
48	1.41	0.640	5,470	24,330	2,800	12,460	N/A	N/A	N/A	N/A	N/A	N/A	N/A	N/A	GD075CP0*RBC
33	3.40	1.542	9,310	41,410	5,040	22,420	N/A	N/A	N/A	N/A	N/A	N/A	N/A	N/A	GF075CP0*RBC
25	6.10	2.767	13,680	60,850	8,960	39,860	N/A	N/A	N/A	N/A	N/A	N/A	N/A	N/A	GG075CP0*RBC
99	0.38	0.172	2,500	11,120	910	4,050	N/A	N/A	N/A	N/A	N/A	N/A	N/A	N/A	GA080CP0*RBC
83	0.57	0.259	3,370	14,990	1,280	5,690	N/A	N/A	N/A	N/A	N/A	N/A	N/A	N/A	GB080CP0*RBC
67	0.84	0.381	4,030	17,930	1,650	7,340	N/A	N/A	N/A	N/A	N/A	N/A	N/A	N/A	GC080CP0*RBC
51	1.53	0.694	5,810	25,840	2,860	12,720	N/A	N/A	N/A	N/A	N/A	N/A	N/A	N/A	GD080CP0*RBC
35	3.50	1.588	9,880	43,950	5,140	22,860	N/A	N/A	N/A	N/A	N/A	N/A	N/A	N/A	GF080CP0*RBC
27	6.50	2.948	14,770	65,700	9,300	41,370	N/A	N/A	N/A	N/A	N/A	N/A	N/A	N/A	GG080CP0*RBC
111	0.44	0.200	2,810	12,500	940	4,180	N/A	N/A	N/A	N/A	N/A	N/A	N/A	N/A	GA090CP0*RBC
93	0.66	0.299	3,780	16,810	1,330	5,920	N/A	N/A	N/A	N/A	N/A	N/A	N/A	N/A	GB090CP0*RBC
75	0.94	0.426	4,510	20,060	1,730	7,700	N/A	N/A	N/A	N/A	N/A	N/A	N/A	N/A	GC090CP0*RBC
57	1.72	0.780	6,500	28,910	2,970	13,210	N/A	N/A	N/A	N/A	N/A	N/A	N/A	N/A	GD090CP0*RBC
39	3.90	1.769	11,000	48,930	5,360	23,840	N/A	N/A	N/A	N/A	N/A	N/A	N/A	N/A	GF090CP0*RBC
30	7.20	3.266	16,420	73,040	9,720	43,240	N/A	N/A	N/A	N/A	N/A	N/A	N/A	N/A	GG090CP0*RBC
123	0.50	0.227	3,110	13,830	990	4,400	N/A	N/A	N/A	N/A	N/A	N/A	N/A	N/A	GA100CP0*RBC
103	0.73	0.331	4,190	18,640	1,400	6,230	N/A	N/A	N/A	N/A	N/A	N/A	N/A	N/A	GB100CP0*RBC
83	1.06	0.481	4,990	22,200	1,781	7,920	N/A	N/A	N/A	N/A	N/A	N/A	N/A	N/A	GC100CP0*RBC
63	1.88	0.853	7,180	31,940	3,070	13,660	N/A	N/A	N/A	N/A	N/A	N/A	N/A	N/A	GD100CP0*RBC
43	4.30	1.950	12,130	53,960	5,550	24,690	N/A	N/A	N/A	N/A	N/A	N/A	N/A	N/A	GF100CP0*RBC
33	7.90	3.583	18,060	80,330	10,040	44,660	N/A	N/A	N/A	N/A	N/A	N/A	N/A	N/A	GG100CP0*RBC
135	0.52	0.236	3,410	15,170	1,030	4,580	N/A	N/A	N/A	N/A	N/A	N/A	N/A	N/A	GA110CP0*RBC
113	0.75	0.340	4,590	20,420	1,464	6,510	N/A	N/A	N/A	N/A	N/A	N/A	N/A	N/A	GB110CP0*RBC

Refer to the Engineering section for load and speed limitations.

SEALED (COMBO) RADIAL CONTACT, C-TYPE

THIN SECTION BALL BEARINGS

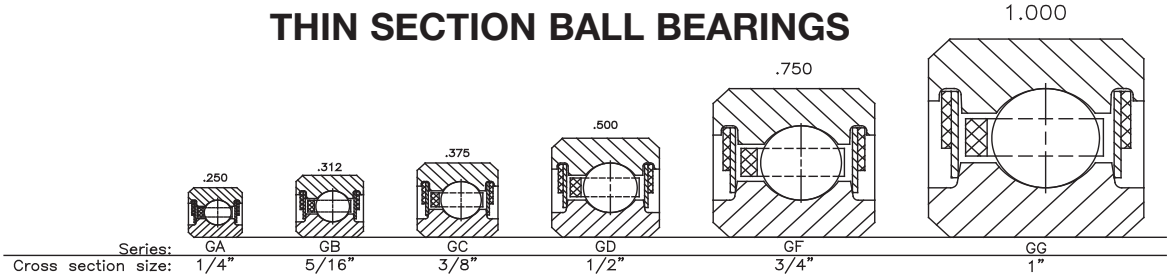

PART NUMBER*	NOMINAL DIMENSIONS												
	B Bore		D Outside Diameter		W Width		G_i Recess Diameter		M_o Groove Diameter		f1 Housing Fillet		Ball Diameter
	in.	mm	in.	mm	in.	mm	in.	mm	in.	mm	in.	mm	in.
GC110CP0*RBC	11.0000	279.400	11.7500	298.450	0.3750	9.525	11.188	284.18	11.188	284.18	0.040	1.02	3/16
GD110CP0*RBC	11.0000	279.400	12.0000	304.800	0.5000	12.700	11.250	285.75	11.250	285.75	0.060	1.52	1/4
GF110CP0*RBC	11.0000	279.400	12.5000	317.500	0.7500	19.050	11.375	288.93	11.375	288.93	0.080	2.03	3/8
GG110CP0*RBC	11.0000	279.400	13.0000	330.200	1.0000	25.400	11.500	292.10	11.500	292.10	0.080	2.03	1/2
GA120CP0*RBC	12.0000	304.800	12.5000	317.500	0.2500	6.350	12.125	307.98	12.125	307.98	0.025	0.64	1/8
GB120CP0*RBC	12.0000	304.800	12.6250	320.675	0.3125	7.938	12.156	308.76	12.156	308.76	0.032	0.81	5/32
GC120CP0*RBC	12.0000	304.800	12.7500	323.850	0.3750	9.525	12.188	309.58	12.188	309.58	0.040	1.02	3/16
GD120CP0*RBC	12.0000	304.800	13.0000	330.200	0.5000	12.700	12.250	311.15	12.250	311.15	0.060	1.52	1/4
GF120CP0*RBC	12.0000	304.800	13.5000	342.900	0.7500	19.050	12.375	314.31	12.375	314.31	0.080	2.03	3/8
GG120CP0*RBC	12.0000	304.800	14.0000	355.600	1.0000	25.400	12.500	317.50	12.500	317.50	0.080	2.03	1/2

*The alphanumeric identification system is used under license.
Contact your RBC Sales Engineer for sizes above 12.00" Bore.

- 52100 Steel
- Large Diameter
- Light Weight
- Small Cross Section
- Snap-Over Ball Separator
- Shielded Seals

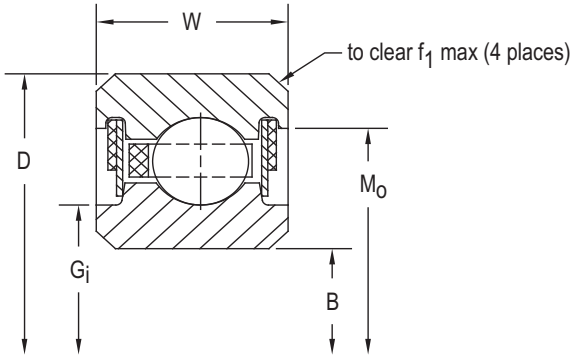

Ball Quantity	Approx. Weight		LOAD RATINGS												PART NUMBER*
			Radial				Thrust				Moment				
			Static		Dynamic		Static		Dynamic		Static		Dynamic		
	lbs.	kg	lbf	N	lbf	N	lbf	N	lbf	N	lbf - in	Nm	lbf - in	Nm	
91	1.16	0.526	5,470	24,330	1,879	8,360	N/A	N/A	N/A	N/A	N/A	N/A	N/A	N/A	**GC110CP0*RBC**
69	2.06	0.934	7,870	35,010	3,180	14,150	N/A	N/A	N/A	N/A	N/A	N/A	N/A	N/A	**GD110CP0*RBC**
47	4.80	2.177	13,260	58,980	5,833	25,950	N/A	N/A	N/A	N/A	N/A	N/A	N/A	N/A	**GF110CP0*RBC**
36	8.60	3.901	19,700	87,630	10,360	46,080	N/A	N/A	N/A	N/A	N/A	N/A	N/A	N/A	**GG110CP0*RBC**
147	0.56	0.254	3,720	16,550	1,078	4,800	N/A	N/A	N/A	N/A	N/A	N/A	N/A	N/A	**GA120CP0*RBC**
123	0.83	0.376	5,000	22,240	1,539	6,850	N/A	N/A	N/A	N/A	N/A	N/A	N/A	N/A	**GB120CP0*RBC**
99	1.25	0.567	5,950	26,470	1,974	8,780	N/A	N/A	N/A	N/A	N/A	N/A	N/A	N/A	**GC120CP0*RBC**
75	2.25	1.021	8,550	38,030	3,320	14,770	N/A	N/A	N/A	N/A	N/A	N/A	N/A	N/A	**GD120CP0*RBC**
51	5.20	2.359	14,390	64,010	6,105	27,160	N/A	N/A	N/A	N/A	N/A	N/A	N/A	N/A	**GF120CP0*RBC**
39	9.30	4.218	21,340	94,930	10,690	47,550	N/A	N/A	N/A	N/A	N/A	N/A	N/A	N/A	**GG120CP0*RBC**

Refer to the Engineering section for load and speed limitations.

SEALED (COMBO) 4-POINT CONTACT, X-TYPE

THIN SECTION BALL BEARINGS

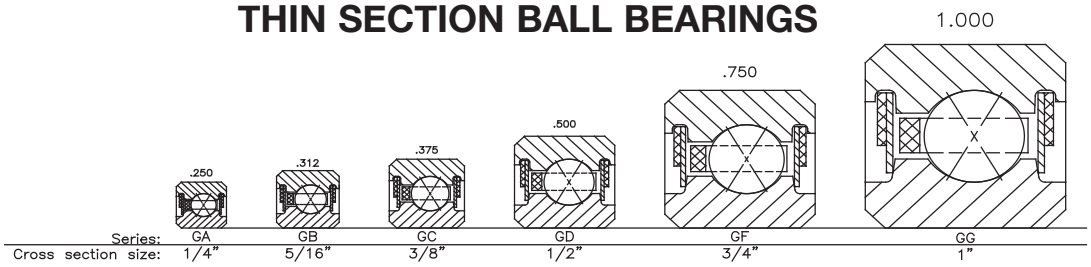

PART NUMBER*	NOMINAL DIMENSIONS												
	B Bore		D Outside Diameter		W Width		G_i Recess Diameter		M_o Groove Diameter		f_1 Housing Fillet		Ball Diameter
	in.	mm	in.	mm	in.	mm	in.	mm	in.	mm	in.	mm	in.
GA020XP0*RBC	2.0000	50.800	2.5000	63.500	0.2500	6.350	2.125	53.98	2.343	59.51	0.025	0.64	1/8
GB020XP0*RBC	2.0000	50.800	2.6250	66.675	0.3125	7.938	2.156	54.76	2.430	61.72	0.032	0.81	5/32
GA025XP0*RBC	2.5000	63.500	3.0000	76.200	0.2500	6.350	2.625	66.68	2.843	72.21	0.025	0.64	1/8
GB025XP0*RBC	2.5000	63.500	3.1250	79.375	0.3125	7.938	2.656	67.46	2.930	74.42	0.032	0.81	5/32
GA030XP0*RBC	3.0000	76.200	3.5000	88.900	0.2500	6.350	3.156	80.16	3.343	84.91	0.025	0.64	1/8
GB030XP0*RBC	3.0000	76.200	3.6250	92.075	0.3125	7.938	3.125	79.38	3.430	87.12	0.032	0.81	5/32
GA035XP0*RBC	3.5000	88.900	4.0000	101.600	0.2500	6.350	3.625	92.08	3.843	97.61	0.025	0.64	1/8
GB035XP0*RBC	3.5000	88.900	4.1250	104.775	0.3125	7.938	3.656	92.86	3.930	99.82	0.032	0.81	5/32
GA040XP0*RBC	4.0000	101.600	4.5000	114.300	0.2500	6.350	4.125	104.78	4.343	110.31	0.025	0.64	1/8
GB040XP0*RBC	4.0000	101.600	4.6250	117.475	0.3125	7.938	4.156	105.56	4.430	112.52	0.032	0.81	5/32
GC040XP0*RBC	4.0000	101.600	4.7500	120.650	0.3750	9.525	4.188	106.38	4.516	114.71	0.040	1.02	3/16
GD040XP0*RBC	4.0000	101.600	5.0000	127.000	0.5000	12.700	4.250	107.95	4.687	119.05	0.060	1.52	1/4
GF040XP0*RBC	4.0000	101.600	5.5000	139.700	0.7500	19.050	4.375	111.13	5.031	127.79	0.080	2.03	3/8
GG040XP0*RBC	4.0000	101.600	6.0000	152.400	1.0000	25.400	4.500	114.30	5.375	136.53	0.080	2.03	1/2
GA042XP0*RBC	4.2500	107.950	4.7500	120.650	0.2500	6.350	4.375	111.13	4.593	116.66	0.025	0.64	1/8
GB042XP0*RBC	4.2500	107.950	4.8750	123.825	0.3125	7.938	4.406	111.91	4.680	118.87	0.032	0.81	5/32
GC042XP0*RBC	4.2500	107.950	5.0000	127.000	0.3750	9.525	4.438	112.73	4.766	121.06	0.040	1.02	3/16
GD042XP0*RBC	4.2500	107.950	5.2500	133.350	0.5000	12.700	4.500	114.30	4.937	125.40	0.060	1.52	1/4
GF042XP0*RBC	4.2500	107.950	5.7500	146.050	0.7500	19.050	4.625	117.48	5.281	134.14	0.080	2.03	3/8
GG042XP0*RBC	4.2500	107.950	6.2500	158.750	1.0000	25.400	4.750	120.65	5.590	141.99	0.080	2.03	1/2
GA045XP0*RBC	4.5000	114.300	5.0000	127.000	0.2500	6.350	4.625	117.48	4.843	123.01	0.025	0.64	1/8
GB045XP0*RBC	4.5000	114.300	5.1250	130.175	0.3125	7.938	4.656	118.26	4.930	125.22	0.032	0.81	5/32
GC045XP0*RBC	4.5000	114.300	5.2500	133.350	0.3750	9.525	4.688	119.08	5.016	127.41	0.040	1.02	3/16
GD045XP0*RBC	4.5000	114.300	5.5000	139.700	0.5000	12.700	4.750	120.65	5.187	131.75	0.060	1.52	1/4
GF045XP0*RBC	4.5000	114.300	6.0000	152.400	0.7500	19.050	4.875	123.83	5.531	140.49	0.080	2.03	3/8
GG045XP0*RBC	4.5000	114.300	6.5000	165.100	1.0000	25.400	5.000	127.00	5.875	149.23	0.080	2.03	1/2
GA047XP0*RBC	4.7500	120.650	5.2500	133.350	0.2500	6.350	4.875	123.83	5.093	129.36	0.025	0.64	1/8
GB047XP0*RBC	4.7500	120.650	5.3750	136.525	0.3125	7.938	4.906	124.61	5.180	131.57	0.032	0.81	5/32
GC047XP0*RBC	4.7500	120.650	5.5000	139.700	0.3750	9.525	4.938	125.43	5.266	133.76	0.040	1.02	3/16
GD047XP0*RBC	4.7500	120.650	5.7500	146.050	0.5000	12.700	5.000	127.00	5.437	138.10	0.060	1.52	1/4
GF047XP0*RBC	4.7500	120.650	6.2500	158.750	0.7500	19.050	5.125	130.18	5.781	146.84	0.080	2.03	3/8
GG047XP0*RBC	4.7500	120.650	6.7500	171.450	1.0000	25.400	5.250	133.35	6.090	154.69	0.080	2.03	1/2
GA050XP0*RBC	5.0000	127.000	5.5000	139.700	0.2500	6.350	5.125	130.18	5.343	135.71	0.025	0.64	1/8
GB050XP0*RBC	5.0000	127.000	5.6250	142.875	0.3125	7.938	5.156	130.96	5.430	137.92	0.032	0.81	5/32
GC050XP0*RBC	5.0000	127.000	5.7500	146.050	0.3750	9.525	5.188	131.78	5.516	140.11	0.040	1.02	3/16
GD050XP0*RBC	5.0000	127.000	6.0000	152.400	0.5000	12.700	5.250	133.35	5.687	144.45	0.060	1.52	1/4
GF050XP0*RBC	5.0000	127.000	6.5000	165.100	0.7500	19.050	5.375	136.53	6.031	153.19	0.080	2.03	3/8
GG050XP0*RBC	5.0000	127.000	7.0000	177.800	1.0000	25.400	5.500	139.70	6.375	161.93	0.080	2.03	1/2
GA055XP0*RBC	5.5000	139.700	6.0000	152.400	0.2500	6.350	5.625	142.88	5.843	148.41	0.025	0.64	1/8
GB055XP0*RBC	5.5000	139.700	6.1250	155.575	0.3125	7.938	5.656	143.66	5.930	150.62	0.032	0.81	5/32
GC055XP0*RBC	5.5000	139.700	6.2500	158.750	0.3750	9.525	5.688	144.48	6.016	152.81	0.040	1.02	3/16
GD055XP0*RBC	5.5000	139.700	6.5000	165.100	0.5000	12.700	5.750	146.05	6.187	157.15	0.060	1.52	1/4
GF055XP0*RBC	5.5000	139.700	7.0000	177.800	0.7500	19.050	5.875	149.23	6.531	165.89	0.080	2.03	3/8
GG055XP0*RBC	5.5000	139.700	7.5000	190.500	1.0000	25.400	6.000	152.40	6.875	174.63	0.080	2.03	1/2

*The alphanumeric identification system is used under license.

- 52100 Steel
- Large Diameter
- Light Weight
- Small Cross Section
- Snap-Over Ball Separator
- Shielded Seals

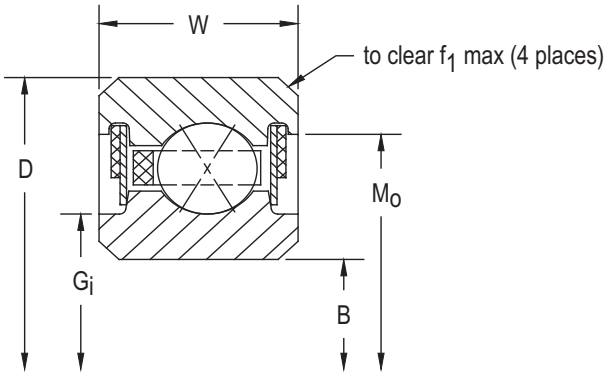

Ball Quantity	Approx. Weight		LOAD RATINGS												PART NUMBER*
			Radial				Thrust				Moment				
			Static		Dynamic		Static		Dynamic		Static		Dynamic		
	lbs.	kg	lbf	N	lbf	N	lbf	N	lbf	N	lbf - in	Nm	lbf - in	Nm	
27	0.10	0.045	680	3,020	514	2,290	1,710	7,610	1,230	5,470	770	90	550	60	GA020XP0*RBC
23	0.16	0.073	930	4,140	758	3,370	2,340	10,410	1,740	7,470	1,080	120	800	90	GB020XP0*RBC
33	0.13	0.059	830	3,690	583	2,590	2,090	9,300	1.320	5,870	1,150	130	730	80	GA025XP0*RBC
28	0.20	0.091	1,140	5,070	848	3,770	2,840	12,630	1,880	8,360	1,600	180	1,060	120	GB025XP0*RBC
39	0.15	0.068	990	4,400	643	2,860	2,470	10,990	1,410	6,270	1,600	180	920	100	GA030XP0*RBC
33	0.24	0.109	1,340	5,960	933	4,150	3,350	14,900	1,990	8,850	2,220	250	1,320	150	GB030XP0*RBC
45	0.18	0.082	1,140	5,070	701	3,120	2,850	12,680	1,480	6,580	2,130	240	1,110	130	GA035XP0*RBC
38	0.27	0.122	1,540	6,850	1,014	4,510	3,860	17,170	2,100	9.340	2,940	330	1,600	180	GB035XP0*RBC
51	0.19	0.086	1,290	5,740	756	3,363	3,220	14,320	1,550	6,890	2,740	310	1,320	150	GA040XP0*RBC
43	0.30	0.136	1,750	7,780	1,091	4,850	4,370	19,440	2,210	9,830	3,770	430	1,900	210	GB040XP0*RBC
35	0.45	0.204	2,100	9,340	1,417	6,300	5,260	23,400	2,810	12,500	4,600	520	2,460	280	GC040XP0*RBC
27	0.78	0.354	3,080	13,700	2,311	10,280	7,700	34,250	4,890	21,750	6,930	780	4,400	500	GD040XP0*RBC
19	1.90	0.862	5,360	23,840	4,665	20,750	13,400	59,610	8,830	39,280	12,730	1,440	8,390	950	GF040XP0*RBC
15	3.60	1.633	8,210	36,520	7,979	35,490	20,520	91,280	15,150	67,390	20,520	2,320	15,150	1,710	GG040XP0*RBC
54	0.20	0.091	1,370	6,090	783	3,480	3,410	15,170	1,590	7,070	3,070	350	1,430	160	GA042XP0*RBC
45	0.31	0.141	1,830	8,140	1,120	4,980	4,570	20,330	2.230	9,920	4,170	470	2,040	230	GB042XP0*RBC
37	0.47	0.213	2,220	9,880	1,464	6,510	5,560	24,730	2,870	12,770	5,140	580	2,650	300	GC042XP0*RBC
28	0.83	0.376	3,190	14,190	2,355	10,480	7,980	35,500	4,920	21,890	7,580	860	4,670	530	GD042XP0*RBC
20	2.00	0.907	5,640	25,090	4,795	21,330	14,110	62,760	8,990	39,990	14,110	1,590	8,993	1,020	GF042XP0*RBC
15	3.80	1.724	8,210	36,520	7,917	35,220	20,520	91,280	15,150	67,390	21,550	2,430	15,910	1,800	GG042XP0*RBC
57	0.22	0.100	1,440	6,410	809	3,600	3,600	16,010	1,610	7,160	3,420	390	1,530	170	GA045XP0*RBC
48	0.33	0.150	1,950	8,670	1,165	5,180	4,880	21,710	2,300	10,230	4,690	530	2,220	250	GB045XP0*RBC
39	0.48	0.218	2,340	10,410	1,510	6,720	5,860	26,070	2,920	12,990	5,710	650	2,850	320	GC045XP0*RBC
30	0.88	0.399	3,420	15,210	2,454	10,920	8,550	38,030	5,080	22,600	8,550	970	5,080	570	GD045XP0*RBC
21	2.10	0.953	5,930	26,380	4,923	21,900	14,810	65,880	9,180	40,830	15,550	1,760	9,695	1,100	GF045XP0*RBC
16	4.00	1.814	8,760	38,970	8,205	36,500	21,890	97,370	15,820	70,370	24,080	2,720	17,400	1,970	GG045XP0*RBC
60	0.23	0.104	1,520	6,760	834	3,710	3,790	16,860	1,650	7,340	3,790	430	1,650	190	GA047XP0*RBC
50	0.34	0.154	2,030	9,030	1,193	5,310	5,080	22,600	2,310	10,280	5,140	580	2,340	260	GB047XP0*RBC
41	0.50	0.227	2,460	10,940	1,556	6,920	6,160	27,400	2,970	13,210	6,320	710	3,040	340	GC047XP0*RBC
31	0.94	0.426	3,530	15,700	2,496	11,100	8,840	39,320	5,130	22,820	9,280	1,050	5,380	610	GD047XP0*RBC
22	2.20	0.998	6,210	27,620	5,048	22,450	15,520	69,040	9,380	41,720	17,070	1,930	10,416	1,180	GF047XP0*RBC
17	4.10	1.860	9,300	41,370	8,487	37,750	23,260	103,470	16,470	73,260	26,740	3,020	18,940	2,140	GG047XP0*RBC
63	0.24	0.109	1,590	7,070	859	3,820	3,980	17,700	1,680	7,470	4,180	470	1,760	200	GA050XP0*RBC
53	0.38	0.172	2,150	9,560	1,236	5,500	5,380	23,930	2,380	10,590	5,720	650	2,520	280	GB050XP0*RBC
43	0.58	0.263	2,590	11,520	1,600	7,120	6,460	28,740	3,040	13,520	6,950	790	3,270	370	GC050XP0*RBC
33	1.00	0.454	3,760	16,730	2,592	11,530	9,410	41,860	5,270	23,440	10,350	1,170	5,800	660	GD050XP0*RBC
23	2.30	1.043	6,490	28,870	5,172	23,010	16,220	72,150	9,520	42,350	18,660	2,110	11,157	1,260	GF050XP0*RBC
18	4.30	1.950	9,850	43,810	8,762	38,980	24,620	109,520	17,110	76,110	29,550	3,340	20,530	2,320	GG050XP0*RBC
69	0.25	0.113	1,750	7,780	908	4,040	4,360	19,390	1,720	7,650	5,020	570	1,970	220	GA055XP0*RBC
58	0.41	0.186	2,360	10,500	1,304	5,800	5,890	26,200	2,460	10,940	6,850	770	2,860	320	GB055XP0*RBC
47	0.59	0.268	2,830	12,590	1,687	7,500	7,060	31,400	3,120	13,880	8,300	940	3,717	420	GC055XP0*RBC
36	1.06	0.481	4,100	18,240	2,725	12,120	10,260	45,640	5,450	24,240	12,310	1,390	6,540	740	GD055XP0*RBC
25	2.50	1.134	7,050	31,360	5,415	24,090	17,630	78,420	9,820	43,680	22,040	2,490	12,696	1,430	GF055XP0*RBC
19	4.70	2.132	10,400	46,260	8,979	39,940	25,990	115,610	17,460	77,670	33,790	3,820	22,700	2,560	GG055XP0*RBC

Refer to the Engineering section for load and speed limitations.

SEALED (COMBO) 4-POINT CONTACT, X-TYPE

THIN SECTION BALL BEARINGS

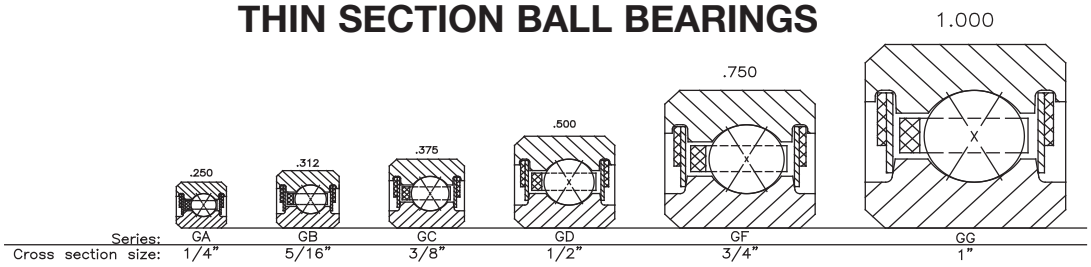

PART NUMBER*	NOMINAL DIMENSIONS												
	B Bore		D Outside Diameter		W Width		G_i Recess Diameter		M_o Groove Diameter		f_1 Housing Fillet		Ball Diameter
	in.	mm	in.	mm	in.	mm	in.	mm	in.	mm	in.	mm	in.
GA060XP0*RBC	6.0000	152.400	6.5000	165.100	0.2500	6.350	6.125	155.58	6.343	161.11	0.025	0.64	1/8
GB060XP0*RBC	6.0000	152.400	6.6250	168.275	0.3125	7.938	6.155	156.34	6.430	163.32	0.032	0.81	5/32
GC060XP0*RBC	6.0000	152.400	6.7500	171.450	0.3750	9.525	6.188	157.18	6.516	165.51	0.040	1.02	3/16
GD060XP0*RBC	6.0000	152.400	7.0000	177.800	0.5000	12.700	6.250	158.75	6.687	169.85	0.060	1.52	1/4
GF060XP0*RBC	6.0000	152.400	7.5000	190.500	0.7500	19.050	6.375	161.93	7.031	178.59	0.080	2.03	3/8
GG060XP0*RBC	6.0000	152.400	8.0000	203.200	1.0000	25.400	6.500	165.10	7.375	187.33	0.080	2.03	1/2
GA065XP0*RBC	6.5000	165.100	7.0000	177.800	0.2500	6.350	6.625	168.28	6.843	173.81	0.025	0.64	1/8
GB065XP0*RBC	6.5000	165.100	7.1250	180.975	0.3125	7.938	6.656	169.06	6.930	176.02	0.032	0.81	5/32
GC065XP0*RBC	6.5000	165.100	7.2500	184.150	0.3750	9.525	6.688	169.88	7.016	178.21	0.040	1.02	3/16
GD065XP0*RBC	6.5000	165.100	7.5000	190.500	0.5000	12.700	6.750	171.45	7.187	182.55	0.060	1.52	1/4
GF065XP0*RBC	6.5000	165.100	8.0000	203.200	0.7500	19.050	6.875	174.63	7.531	191.29	0.080	2.03	3/8
GG065XP0*RBC	6.5000	165.100	8.5000	215.900	1.0000	25.400	7.000	177.80	7.875	200.03	0.080	2.03	1/2
GA070XP0*RBC	7.0000	177.800	7.5000	190.500	0.2500	6.350	7.125	180.98	7.343	186.51	0.025	0.64	1/8
GB070XP0*RBC	7.0000	177.800	7.6250	193.675	0.3125	7.938	7.156	181.76	7.430	188.72	0.032	0.81	5/32
GC070XP0*RBC	7.0000	177.800	7.7500	196.850	0.3750	9.525	7.188	182.58	7.516	190.91	0.040	1.02	3/16
GD070XP0*RBC	7.0000	177.800	8.0000	203.200	0.5000	12.700	7.250	184.15	7.687	195.25	0.060	1.52	1/4
GF070XP0*RBC	7.0000	177.800	8.5000	215.900	0.7500	19.050	7.375	187.33	8.031	203.99	0.080	2.03	3/8
GG070XP0*RBC	7.0000	177.800	9.0000	228.600	1.0000	25.400	7.500	190.50	8.375	212.73	0.080	2.03	1/2
GA075XP0*RBC	7.5000	190.500	8.0000	203.200	0.2500	6.350	7.625	193.68	7.843	199.21	0.025	0.64	1/8
GB075XP0*RBC	7.5000	190.500	8.1250	206.375	0.3125	7.938	7.656	194.46	7.930	201.42	0.032	0.81	5/32
GC075XP0*RBC	7.5000	190.500	8.2500	209.550	0.3750	9.525	7.688	195.28	8.016	203.61	0.040	1.02	3/16
GD075XP0*RBC	7.5000	190.500	8.5000	215.900	0.5000	12.700	7.750	196.85	8.187	207.95	0.060	1.52	1/4
GF075XP0*RBC	7.5000	190.500	9.0000	228.600	0.7500	19.050	7.875	200.03	8.531	216.69	0.080	2.03	3/8
GG075XP0*RBC	7.5000	190.500	9.5000	241.300	1.0000	25.400	8.000	203.20	8.875	225.43	0.080	2.03	1/2
GA080XP0*RBC	8.0000	203.200	8.5000	215.900	0.2500	6.350	8.125	206.38	8.343	211.91	0.025	0.64	1/8
GB080XP0*RBC	8.0000	203.200	8.6250	219.075	0.3125	7.938	8.156	207.16	8.430	214.12	0.032	0.81	5/32
GC080XP0*RBC	8.0000	203.200	8.7500	222.250	0.3750	9.525	8.188	207.98	8.516	216.31	0.040	1.02	3/16
GD080XP0*RBC	8.0000	203.200	9.0000	228.600	0.5000	12.700	8.250	209.55	8.687	220.65	0.060	1.52	1/4
GF080XP0*RBC	8.0000	203.200	9.5000	241.300	0.7500	19.050	8.375	212.73	9.031	229.39	0.080	2.03	3/8
GG080XP0*RBC	8.0000	203.200	10.0000	254.000	1.0000	25.400	8.500	215.90	9.375	238.13	0.080	2.03	1/2
GA090XP0*RBC	9.0000	228.600	9.5000	241.300	0.2500	6.350	9.125	231.78	9.343	237.31	0.025	0.64	1/8
GB090XP0*RBC	9.0000	228.600	9.6250	244.475	0.3125	7.938	9.156	232.56	9.430	239.52	0.032	0.81	5/32
GC090XP0*RBC	9.0000	228.600	9.7500	247.650	0.3750	9.525	9.188	233.38	9.516	241.71	0.040	1.02	3/16
GD090XP0*RBC	9.0000	228.600	10.0000	254.000	0.5000	12.700	9.250	234.95	9.687	246.05	0.060	1.52	1/4
GF090XP0*RBC	9.0000	228.600	10.5000	266.700	0.7500	19.050	9.375	238.13	10.031	254.79	0.080	2.03	3/8
GG090XP0*RBC	9.0000	228.600	11.0000	279.400	1.0000	25.400	9.500	241.30	10.375	263.53	0.080	2.03	1/2
GA100XP0*RBC	10.0000	254.000	10.5000	266.700	0.2500	6.350	10.125	257.18	10.343	262.71	0.025	0.64	1/8
GB100XP0*RBC	10.0000	254.000	10.6250	269.875	0.3125	7.938	10.156	257.96	10.430	264.92	0.032	0.81	5/32
GC100XP0*RBC	10.0000	254.000	10.7500	273.050	0.3750	9.525	10.188	258.78	10.516	267.11	0.040	1.02	3/16
GD100XP0*RBC	10.0000	254.000	11.0000	279.400	0.5000	12.700	10.250	260.35	10.687	271.45	0.060	1.52	1/4
GF100XP0*RBC	10.0000	254.000	11.5000	292.100	0.7500	19.050	10.375	263.53	11.031	280.91	0.080	2.03	3/8
GG100XP0*RBC	10.0000	254.000	12.0000	304.800	1.0000	25.400	10.500	266.70	11.375	288.93	0.080	2.03	1/2
GA110XP0*RBC	11.0000	279.400	11.5000	292.100	0.2500	6.350	11.125	282.58	11.343	288.11	0.025	0.64	1/8
GB110XP0*RBC	11.0000	279.400	11.6250	295.275	0.3125	7.938	11.156	283.36	11.430	290.32	0.032	0.81	5/32

*The alphanumeric identification system is used under license.

- 52100 Steel
- Large Diameter
- Light Weight
- Small Cross Section
- Snap-Over Ball Separator
- Shielded Seals

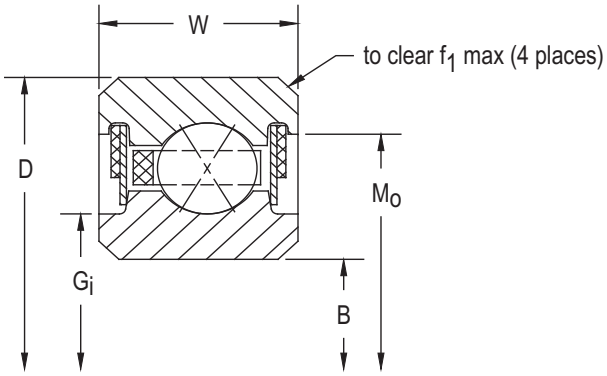

Ball Quantity	Approx. Weight		LOAD RATINGS												PART NUMBER*
			Radial				Thrust				Moment				
			Static		Dynamic		Static		Dynamic		Static		Dynamic		
	lbs.	kg	lbf	N	lbf	N	lbf	N	lbf	N	lbf - in	Nm	lbf - in	Nm	
75	0.28	0.127	1,900	8,452	955	4,250	4,740	21,080	1,780	7,920	5,930	670	2,240	250	GA060XP0*RBC
63	0.44	0.200	2,560	11,390	1,371	6,100	6,400	28,470	2,540	11,300	8,080	910	3,247	370	GB060XP0*RBC
51	0.63	0.286	3,070	13,660	1,770	7,870	7,660	34,070	3,220	14,320	9,770	1,100	4,234	480	GC060XP0*RBC
39	1.16	0.526	4,450	19,790	2,855	12,700	11,120	49,460	5,610	24,950	14,450	1,630	7,290	820	GD060XP0*RBC
27	2.70	1.225	7,620	33,900	5,651	25,140	19,050	84,740	10,150	45,150	25,710	2,900	14,311	1,620	GF060XP0*RBC
21	5.10	2.313	11,490	51,110	9,503	42,270	28,730	127,800	18,290	81,360	40,220	4,540	25,610	2,890	GG060XP0*RBC
81	0.30	0.136	2,050	9120	1,001	4,450	5,120	22,770	1,840	8,180	6,910	780	2,535	290	GA065XP0*RBC
68	0.47	0.214	2,760	12,280	1,435	6,380	6,910	30,740	2,590	11,520	9,410	1,060	3,668	410	GB065XP0*RBC
55	0.68	0.308	3,310	14,720	1,851	8,230	8,270	36,790	3,300	14,680	11,370	1,280	4,775	540	GC065XP0*RBC
42	1.22	0.553	4,790	21,310	2,980	13,260	11,970	53,250	5,740	25,530	16,760	1,890	8,040	910	GD065XP0*RBC
29	2.90	1.315	8,180	36,390	5,880	26,160	20,460	91,010	10,380	46,170	29,660	3,350	15,993	1,810	GF065XP0*RBC
22	5.40	2.449	12,040	53,560	9,713	43,210	30,100	133,890	18,520	82,380	45,140	5,100	27,770	3,140	GG065XP0*RBC
87	0.31	0.141	2,200	9,790	1,046	4,650	5,500	24,470	1,850	8,230	7,980	900	2,844	320	GA070XP0*RBC
73	0.50	0.227	2,970	13,210	1,498	6,660	7,420	33,010	2,660	11,830	10,850	1,230	4,109	460	GB070XP0*RBC
59	0.73	0.331	3,550	15,790	1,931	8,590	8,870	39,460	3,420	15,210	13,080	1,480	5,341	600	GC070XP0*RBC
45	1.31	0.594	5,130	22,820	3,103	13,800	12,830	57,070	5,880	26,160	19,240	2,170	8,810	1,000	GD070XP0*RBC
31	3.20	1.451	8,750	38,920	6,103	27,150	21,870	97,280	10,640	47,330	33,890	3,830	17,744	2,000	GF070XP0*RBC
24	5.80	2.631	13,130	58,410	10,208	45,410	32,830	146,040	19,330	85,980	52,530	5,940	30,930	3,490	GG070XP0*RBC
93	0.34	0.154	2,350	10,450	1,089	4,840	5,880	26,160	1,890	8,410	9,120	1,030	3,165	360	GA075XP0*RBC
78	0.53	0.240	3,170	14,100	1,559	6,930	7,920	35,230	2,730	12,140	12,380	1,400	4,568	520	GB075XP0*RBC
63	0.78	0.354	3,790	16,860	2,007	8,930	9,470	42,120	3,480	15,480	14,910	1,680	5,930	670	GC075XP0*RBC
48	1.41	0.640	5,470	24,330	3,222	14,330	13,680	60,850	6,060	26,960	21,890	2,470	9,700	1,100	GD075XP0*RBC
33	3.40	1.542	9,310	41,410	6,323	28,130	23,280	103,550	10,930	48,620	38,410	4,340	19,568	2,210	GF075XP0*RBC
25	6.10	2.767	13,680	60,850	10,410	46,310	34,200	152,130	19,460	86,560	58,140	6,570	33,196	3,750	GG075XP0*RBC
99	0.38	0.172	2,500	11,120	1,131	5,030	6,260	27,850	1,970	8,760	10,330	1,170	3,499	400	GA080XP0*RBC
83	0.57	0.259	3,370	14,990	1,618	7,200	8,430	37,500	2,790	12,410	14,020	1,580	5,045	570	GB080XP0*RBC
67	0.84	0.381	4,030	17,930	2,082	9,260	10,070	44,790	3,560	15,840	16,870	1,910	6,542	740	GC080XP0*RBC
51	1.53	0.694	5,810	25,840	3,338	14,850	14,540	64,680	6,170	27,450	24,710	2,790	10,643	1,200	GD080XP0*RBC
35	3.50	1.588	9,880	43,950	6,535	29,070	24,690	109,830	11,190	49,780	43,200	4,880	21,453	2,420	GF080XP0*RBC
27	6.50	2.948	14,770	65,700	10,882	48,410	36,940	164,320	20,230	89,990	66,480	7,510	36,743	4,150	GG080XP0*RBC
111	0.44	0.200	2,810	12,500	1,212	5,390	7,020	31,230	2,040	9,070	12,990	1,470	4,204	470	GA090XP0*RBC
93	0.66	0.299	3,780	16,810	1,732	7,700	9,450	42,040	2,890	12,860	17,600	1,990	6,050	680	GB090XP0*RBC
75	0.94	0.426	4,510	20,060	2,226	9,900	11,270	50,130	3,690	16,410	21,130	2,390	7,830	880	GC090XP0*RBC
57	1.72	0.780	6,500	28,910	3,561	15,840	16,250	72,280	6,410	28,510	30,870	3,490	12,693	1,430	GD090XP0*RBC
39	3.90	1.769	11,000	48,930	6,947	30,900	27,510	122,370	11,630	51,730	53,640	6,060	25,410	2,870	GF090XP0*RBC
30	7.20	3.266	16,420	73,040	11,526	51,270	41,040	182,560	21,020	93,500	82,080	9,270	43,240	4,890	GG090XP0*RBC
123	0.50	0.227	3,110	13,830	1,289	5,730	7,780	34,610	2,180	9,700	15,940	1,800	4,956	560	GA100XP0*RBC
103	0.73	0.331	4,190	18,640	1,841	8,190	10,460	46,530	3,080	13,700	21,580	2,440	7,121	800	GB100XP0*RBC
83	1.06	0.481	4,990	22,200	2,364	10,520	12,470	55,470	3,930	17,480	25,880	2,920	9,201	1,040	GC100XP0*RBC
63	1.88	0.853	7,180	31,940	3,776	16,800	17,960	79,890	6,680	29,710	37,710	4,260	14,872	1,680	GD100XP0*RBC
43	4.30	1.950	12,130	53,960	7,342	32,660	30,330	134,910	12,100	53,820	65,210	7,370	29,608	3,350	GF100XP0*RBC
33	7.90	3.583	18,060	80,330	12,147	54,030	45,140	200,790	21,790	96,930	99,320	11,220	50,124	5,660	GG100XP0*RBC
135	0.52	0.236	3,410	15,170	1,362	6,060	8,540	37,990	2,320	10,320	19,210	2,170	5,750	650	GA110XP0*RBC
113	0.75	0.340	4,590	20,420	1,945	8,650	11,480	51,070	3,280	14,590	25,970	2,930	8,254	930	GB110XP0*RBC

Refer to the Engineering section for load and speed limitations.

SEALED (COMBO) 4-POINT CONTACT, X-TYPE

THIN SECTION BALL BEARINGS

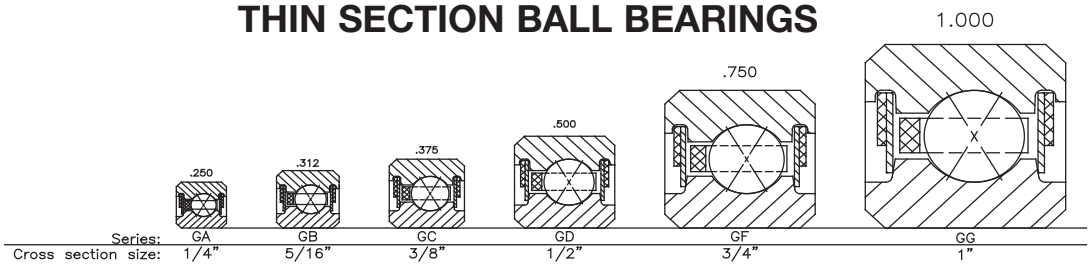

PART NUMBER*	NOMINAL DIMENSIONS												
	B Bore		D Outside Diameter		W Width		G_i Recess Diameter		M_o Groove Diameter		f_1 Housing Fillet		Ball Diameter
	in.	mm	in.	mm	in.	mm	in.	mm	in.	mm	in.	mm	in.
GC110XP0*RBC	11.0000	279.400	11.7500	298.450	0.3750	9.525	11.188	284.18	11.516	292.51	0.040	1.02	3/16
GD110XP0*RBC	11.0000	279.400	12.0000	304.800	0.5000	12.700	11.250	285.75	11.687	296.85	0.060	1.52	1/4
GF110XP0*RBC	11.0000	279.400	12.5000	317.500	0.7500	19.050	11.375	288.93	12.031	305.59	0.080	2.03	3/8
GG110XP0*RBC	11.0000	279.400	13.0000	330.200	1.0000	25.400	11.500	292.10	12.375	314.33	0.080	2.03	1/2
GA120XP0*RBC	12.0000	304.800	12.5000	317.500	0.2500	6.350	12.125	307.98	12.343	313.51	0.025	0.64	1/8
GB120XP0*RBC	12.0000	304.800	12.6250	320.675	0.3125	7.938	12.156	308.76	12.430	315.72	0.032	0.81	5/32
GC120XP0*RBC	12.0000	304.800	12.7500	323.850	0.3750	9.525	12.188	309.58	12.516	317.91	0.040	1.02	3/16
GD120XP0*RBC	12.0000	304.800	13.0000	330.200	0.5000	12.700	12.250	311.15	12.687	322.25	0.060	1.52	1/4
GF120XP0*RBC	12.0000	304.800	13.5000	342.900	0.7500	19.050	12.375	314.31	13.031	330.99	0.080	2.03	3/8
GG120XP0*RBC	12.0000	304.800	14.0000	355.600	1.0000	25.400	12.500	317.50	13.375	339.73	0.080	2.03	1/2

*The alphanumeric identification system is used under license.
Contact your RBC Sales Engineer for sizes above 12.00" Bore.

- 52100 Steel
- Large Diameter
- Light Weight
- Small Cross Section
- Snap-Over Ball Separator
- Shielded Seals

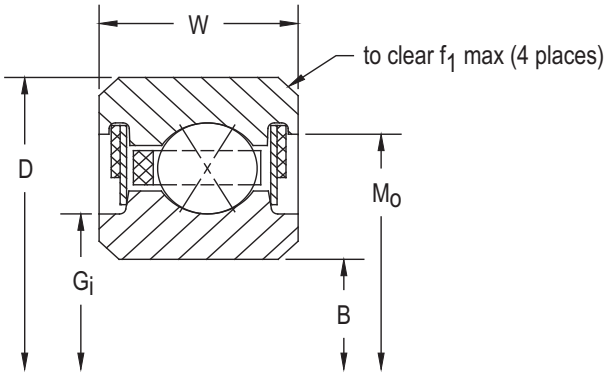

	Ball Quantity	Approx. Weight		LOAD RATINGS												PART NUMBER*
				Radial				Thrust				Moment				
				Static		Dynamic		Static		Dynamic		Static		Dynamic		
		lbs.	kg	lbf	N	lbf	N	lbf	N	lbf	N	lbf - in	Nm	lbf - in	Nm	
	91	1.16	0.526	5,470	24,330	2,496	11,100	13,680	60,850	4,180	18,590	31,110	3,510	10,651	1,200	**GC110XP0*RBC**
	69	2.06	0.934	7,870	35,010	3,981	17,710	19,670	87,500	6,830	30,380	45,230	5,110	17,173	1,940	**GD110XP0*RBC**
	47	4.80	2.177	13,260	58,980	7,721	34,340	33,150	147,460	12,490	55,560	77,910	8,800	34,032	3,850	**GF110XP0*RBC**
	36	8.60	3.901	19,700	87,630	12,739	56,670	49,250	219,070	22,530	100,220	118,200	13,350	57,347	6,480	**GG110XP0*RBC**
	147	0.56	0.254	3,720	16,550	1,433	6,370	9,300	41,370	2,450	10,900	22,770	2,570	6,587	740	**GA120XP0*RBC**
	123	0.83	0.376	5,000	22,240	2,045	9,100	12,500	55,600	3,470	15,440	30,770	3,480	9,446	1,070	**GB120XP0*RBC**
	99	1.25	0.567	5,950	26,470	2,622	11,660	14,880	66,190	4,420	19,660	36,830	4,160	12,174	1,380	**GC120XP0*RBC**
	75	2.25	1.021	8,550	38,030	4,178	18,580	21,380	95,100	7,080	31,490	53,440	6,040	19,590	2,210	**GD120XP0*RBC**
	51	5.20	2.359	14,390	64,010	8,084	35,960	35,970	160,000	13,190	58,670	91,730	10,360	38,666	4,370	**GF120XP0*RBC**
	39	9.30	4.218	21,340	94,930	13,315	59,230	53,350	237,310	23,180	103,110	138,700	15,670	64,935	7,340	**GG120XP0*RBC**

Refer to the Engineering section for load and speed limitations.

SEALED (COMBO) RADIAL CONTACT, C-TYPE

THIN SECTION BALL BEARINGS

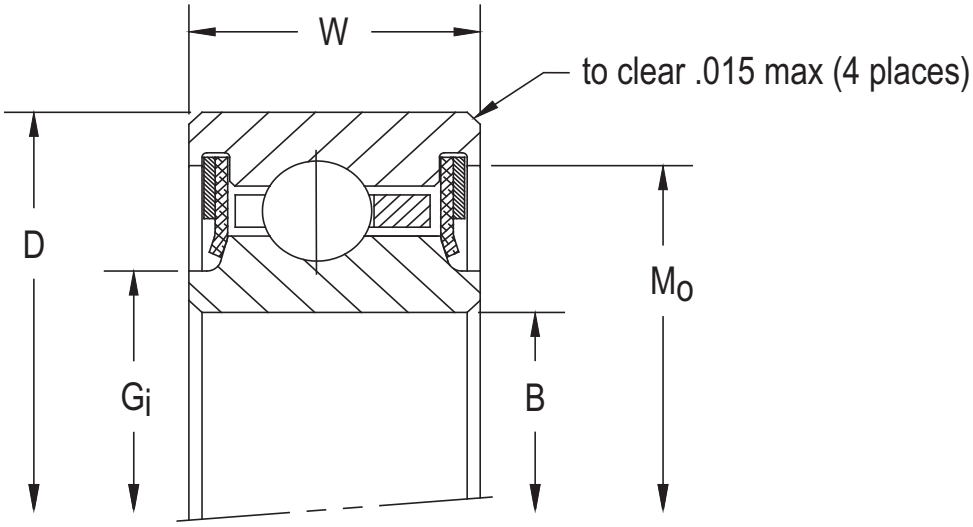

PART NUMBER*	NOMINAL DIMENSIONS											
	B Bore		D Outside Diameter		W Width		G_i Recess Diameter		M_o Groove Diameter		Ball Diameter	Ball Quantity
	in.	mm	in.	mm	in.	mm	in.	mm	in.	mm	in.	
GU040CP0*RBC	4.0000	101.600	4.7500	120.650	0.5000	12.700	4.155	105.54	4.550	115.57	3/16	35
GU042CP0*RBC	4.2500	107.950	5.0000	127.000	0.5000	12.700	4.405	111.89	4.800	121.92	3/16	37
GU045CP0*RBC	4.5000	114.300	5.2500	133.350	0.5000	12.700	4.655	118.24	5.050	128.27	3/16	39
GU047CP0*RBC	4.7500	120.650	5.5000	139.700	0.5000	12.700	4.905	124.59	5.300	134.62	3/16	41
GU050CP0*RBC	5.0000	127.000	5.7500	146.050	0.5000	12.700	5.155	130.94	5.550	140.97	3/16	43
GU055CP0*RBC	5.5000	139.700	6.2500	158.750	0.5000	12.700	5.655	143.64	6.050	153.67	3/16	47
GU060CP0*RBC	6.0000	152.400	6.7500	171.450	0.5000	12.700	6.155	156.34	6.550	166.37	3/16	51
GU065CP0*RBC	6.5000	165.100	7.2500	184.150	0.5000	12.700	6.655	169.04	7.050	179.07	3/16	55
GU070CP0*RBC	7.0000	177.800	7.7500	196.850	0.5000	12.700	7.155	181.74	7.550	191.77	3/16	59
GU075CP0*RBC	7.5000	190.500	8.2500	209.550	0.5000	12.700	7.655	194.44	8.050	204.47	3/16	63
GU080CP0*RBC	8.0000	203.200	8.7500	222.250	0.5000	12.700	8.155	207.14	8.550	217.17	3/16	67
GU090CP0*RBC	9.0000	228.600	9.7500	247.650	0.5000	12.700	9.155	232.54	9.550	242.57	3/16	75
GU100CP0*RBC	10.0000	254.000	10.7500	273.050	0.5000	12.700	10.155	257.94	10.550	267.97	3/16	83
GU110CP0*RBC	11.0000	279.400	11.7500	298.450	0.5000	12.700	11.155	283.34	11.550	293.37	3/16	91
GU120CP0*RBC	12.0000	304.800	12.7500	323.850	0.5000	12.700	12.155	308.74	12.550	318.77	3/16	99

*The alphanumeric identification system is used under license.

- 52100 Steel
- Large Diameter
- Light Weight
- Small Cross Section
- Snap-Over Ball Separator
- Shielded Seals

Approx. Weight		LOAD RATINGS												PART NUMBER*
		Radial				Thrust				Moment				
		Static		Dynamic		Static		Dynamic		Static		Dynamic		
lbs.	kg	lbf	N	lbf	N	lbf	N	lbf	N	lbf - in	Nm	lbf - in	Nm	
0.55	0.249	2,100	9,340	1,290	5,740	N/A	N/A	N/A	N/A	N/A	N/A	N/A	N/A	GU040CP0*RBC
0.58	0.263	2,220	9,880	1,320	5,870	N/A	N/A	N/A	N/A	N/A	N/A	N/A	N/A	GU042CP0*RBC
0.61	0.277	2,340	10,410	1,350	6,010	N/A	N/A	N/A	N/A	N/A	N/A	N/A	N/A	GU045CP0*RBC
0.65	0.295	2,460	10,940	1,370	6,090	N/A	N/A	N/A	N/A	N/A	N/A	N/A	N/A	GU047CP0*RBC
0.68	0.308	2,590	11,520	1,390	6,180	N/A	N/A	N/A	N/A	N/A	N/A	N/A	N/A	GU050CP0*RBC
0.74	0.336	2,830	12,590	1,440	6,410	N/A	N/A	N/A	N/A	N/A	N/A	N/A	N/A	GU055CP0*RBC
0.81	0.367	3,070	13,660	1,490	6,630	N/A	N/A	N/A	N/A	N/A	N/A	N/A	N/A	GU060CP0*RBC
0.87	0.395	3,310	14,720	1,530	6,810	N/A	N/A	N/A	N/A	N/A	N/A	N/A	N/A	GU065CP0*RBC
0.93	0.422	3,550	15,790	1,570	6,980	N/A	N/A	N/A	N/A	N/A	N/A	N/A	N/A	GU070CP0*RBC
0.99	0.449	3,790	16,860	1,600	7,120	N/A	N/A	N/A	N/A	N/A	N/A	N/A	N/A	GU075CP0*RBC
1.06	0.481	4,030	17,930	1,650	7,340	N/A	N/A	N/A	N/A	N/A	N/A	N/A	N/A	GU080CP0*RBC
1.18	0.535	4,510	20,060	1,730	7,700	N/A	N/A	N/A	N/A	N/A	N/A	N/A	N/A	GU090CP0*RBC
1.31	0.594	4,990	22,200	1,781	7,920	N/A	N/A	N/A	N/A	N/A	N/A	N/A	N/A	GU100CP0*RBC
1.43	0.649	5,470	24,330	1,879	8,360	N/A	N/A	N/A	N/A	N/A	N/A	N/A	N/A	GU110CP0*RBC
1.56	0.708	5,950	26,470	1,974	8,780	N/A	N/A	N/A	N/A	N/A	N/A	N/A	N/A	GU120CP0*RBC

Refer to the Engineering section for load and speed limitations.

SEALED (COMBO) 4-POINT CONTACT, X-TYPE

THIN SECTION BALL BEARINGS

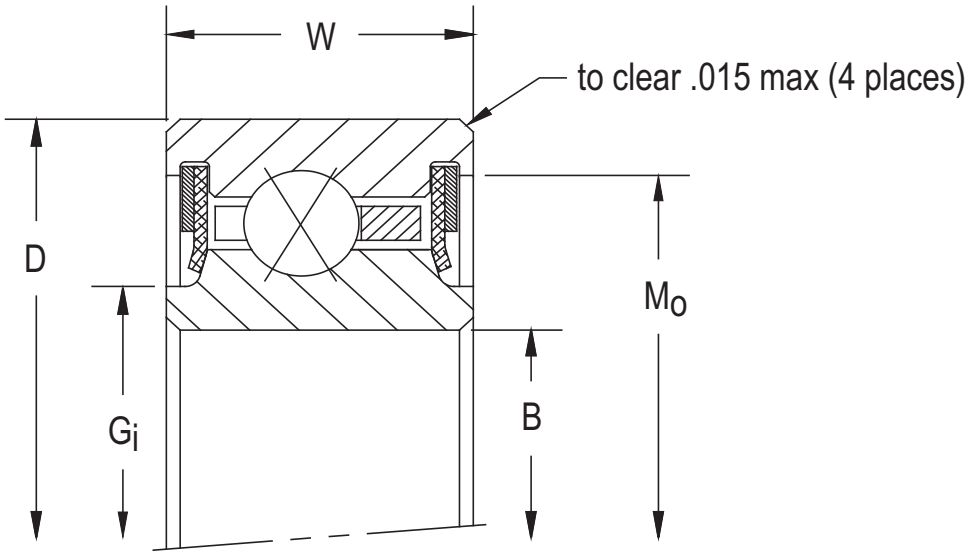

PART NUMBER*	NOMINAL DIMENSIONS											
	B Bore		D Outside Diameter		W Width		G_i Recess Diameter		M_o Groove Diameter		Ball Diameter	Ball Quantity
	in.	mm	in.	mm	in.	mm	in.	mm	in.	mm	in.	
GU040XP0*RBC	4.0000	101.600	4.7500	120.650	0.5000	12.700	4.155	105.54	4.550	115.57	3/16	35
GU042XP0*RBC	4.2500	107.950	5.0000	127.000	0.5000	12.700	4.405	111.89	4.800	121.92	3/16	37
GU045XP0*RBC	4.5000	114.300	5.2500	133.350	0.5000	12.700	4.655	118.24	5.050	128.27	3/16	39
GU047XP0*RBC	4.7500	120.650	5.5000	139.700	0.5000	12.700	4.905	124.59	5.300	134.62	3/16	41
GU050XP0*RBC	5.0000	127.000	5.7500	146.050	0.5000	12.700	5.155	130.94	5.550	140.97	3/16	43
GU055XP0*RBC	5.5000	139.700	6.2500	158.750	0.5000	12.700	5.655	143.64	6.050	153.67	3/16	47
GU060XP0*RBC	6.0000	152.400	6.7500	171.450	0.5000	12.700	6.155	156.34	6.550	166.37	3/16	51
GU065XP0*RBC	6.5000	165.100	7.2500	184.150	0.5000	12.700	6.655	169.04	7.050	179.07	3/16	55
GU070XP0*RBC	7.0000	177.800	7.7500	196.850	0.5000	12.700	7.155	181.74	7.550	191.77	3/16	59
GU075XP0*RBC	7.5000	190.500	8.2500	209.550	0.5000	12.700	7.655	194.44	8.050	204.47	3/16	63
GU080XP0*RBC	8.0000	203.200	8.7500	222.250	0.5000	12.700	8.155	207.14	8.550	217.17	3/16	67
GU090XP0*RBC	9.0000	228.600	9.7500	247.650	0.5000	12.700	9.155	232.54	9.550	242.57	3/16	75
GU100XP0*RBC	10.0000	254.000	10.7500	273.050	0.5000	12.700	10.155	257.94	10.550	267.97	3/16	83
GU110XP0*RBC	11.0000	279.400	11.7500	298.450	0.5000	12.700	11.155	283.34	11.550	293.37	3/16	91
GU120XP0*RBC	12.0000	304.800	12.7500	323.850	0.5000	12.700	12.155	308.74	12.550	318.77	3/16	99

*The alphanumeric identification system is used under license.

- 52100 Steel
- Large Diameter
- Light Weight
- Small Cross Section
- Snap-Over Ball Separator
- Shieled Seals

Approx. Weight		LOAD RATINGS												PART NUMBER*
		Radial				Thrust				Moment				
		Static		Dynamic		Static		Dynamic		Static		Dynamic		
lbs.	kg	lbf	N	lbf	N	lbf	N	lbf	N	lbf - in	Nm	lbf - in	Nm	
0.55	0.249	2,100	9,340	1,417	6,300	5,260	23,400	2,810	12,500	4,600	520	2,460	280	GU040XP0*RBC
0.58	0.263	2,220	9,880	1,464	6,510	5,560	24,730	2,870	12,770	5,140	580	2,650	300	GU042XP0*RBC
0.61	0.277	2,340	10,410	1,510	6,720	5,860	26,070	2,920	12,990	5,710	650	2,850	320	GU045XP0*RBC
0.65	0.295	2,460	10,940	1,556	6,920	6,160	27,400	2,970	13,210	6,320	710	3,040	340	GU047XP0*RBC
0.68	0.308	2,590	11,520	1,600	7,120	6,460	28,740	3,040	13,520	6,950	790	3,270	370	GU050XP0*RBC
0.74	0.336	2,830	12,590	1,687	7,500	7,060	31,400	3,120	13,880	8,300	940	3,717	420	GU055XP0*RBC
0.81	0.367	3,070	13,660	1,770	7,870	7,660	34,070	3,220	14,320	9,770	1,100	4,234	480	GU060XP0*RBC
0.87	0.395	3,310	14,720	1,851	8,230	8,270	36,790	3,300	14,680	11,370	1,280	4,775	540	GU065XP0*RBC
0.93	0.422	3,550	15,790	1,931	8,590	8,870	39,460	3,420	15,210	13,080	1,480	5,341	600	GU070XP0*RBC
0.99	0.449	3,790	16,860	2,007	8,930	9,470	42,120	3,480	15,480	14,910	1,680	5,930	670	GU075XP0*RBC
1.06	0.481	4,030	17,930	2,082	9,260	10,070	44,790	3,560	15,840	16,870	1,910	6,542	740	GU080XP0*RBC
1.18	0.535	4,510	20,060	2,226	9,900	11,270	50,130	3,690	16,410	21,130	2,390	7,830	880	GU090XP0*RBC
1.31	0.594	4,990	22,200	2,364	10,520	12,470	55,470	3,930	17,480	25,880	2,920	9,201	1,040	GU100XP0*RBC
1.43	0.649	5,470	24,330	2,496	11,100	13,680	60,850	4,180	18,590	31,110	3,510	10,651	1,200	GU110XP0*RBC
1.56	0.708	5,950	26,470	2,622	11,660	14,880	66,190	4,420	19,660	36,830	4,160	12,174	1,380	GU120XP0*RBC

Refer to the Engineering section for load and speed limitations.

RADIAL CONTACT, C-TYPE

THIN SECTION BALL BEARINGS

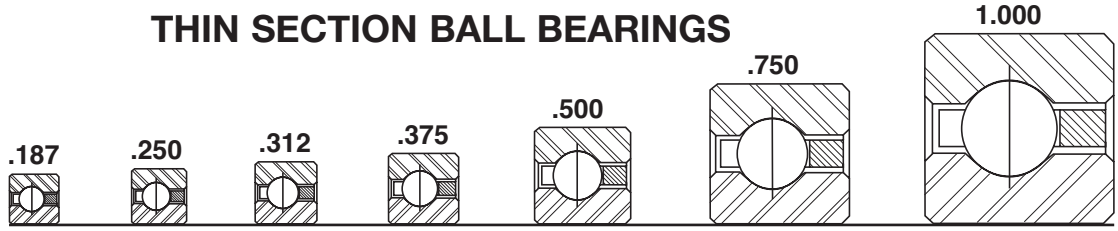

Series:	NAA	NA	NB	NC	ND	NF	NG
Cross Section Size:	3/16"	1/4"	5/16"	3/8"	1/2"	3/4"	1"

PART NUMBER*	NOMINAL DIMENSIONS												
	B Bore		D Outside Diameter		W Width		Land Diameter				f1 Housing Fillet		Ball Diameter
							L_i -Inner Ring		L_o -Outer Ring				
	in.	mm	in.	mm	in.	mm	in.	mm	in.	mm	in.	mm	in.
NAA10CLO*RBC	1.0000	25.400	1.3752	34.930	0.1875	4.763	1.141	28.98	1.234	31.34	0.015	0.38	3/32
NAA15CLO*RBC	1.5000	38.100	1.8752	47.630	0.1875	4.763	1.641	41.68	1.734	44.04	0.015	0.38	3/32
NAA17CLO*RBC	1.7500	44.450	2.1252	53.980	0.1875	4.760	1.890	48.00	1.985	50.42	0.015	0.38	3/32
NA020CPO*RBC	2.0000	50.800	2.5002	63.505	0.2500	6.350	2.188	55.58	2.313	58.75	0.025	0.64	1/8
NB020CPO*RBC	2.0000	50.800	2.6252	66.680	0.3125	7.938	2.234	56.74	2.391	60.73	0.032	0.81	5/32
NA025CPO*RBC	2.5000	63.500	3.0002	76.205	0.2500	6.350	2.688	68.28	2.813	71.45	0.025	0.64	1/8
NB025CPO*RBC	2.5000	63.500	3.1252	79.380	0.3125	7.938	2.734	69.44	2.891	73.43	0.032	0.81	5/32
NA030CPO*RBC	3.0000	76.200	3.5002	88.905	0.2500	6.350	3.188	80.98	3.313	84.15	0.025	0.64	1/8
NB030CPO*RBC	3.0000	76.200	3.6252	92.080	0.3125	7.938	3.234	82.14	3.391	86.13	0.032	0.81	5/32
NA035CPO*RBC	3.5000	88.900	4.0002	101.605	0.2500	6.350	3.688	93.68	3.813	96.85	0.025	0.64	1/8
NB035CPO*RBC	3.5000	88.900	4.1252	104.780	0.3125	7.938	3.734	94.84	3.897	98.98	0.032	0.81	5/32
NA040CPO*RBC	3.9998	101.595	4.5003	114.308	0.2500	6.350	4.188	106.38	4.313	109.55	0.025	0.64	1/8
NB040CPO*RBC	3.9998	101.595	4.6253	117.483	0.3125	7.938	4.234	107.54	4.391	111.53	0.032	0.81	5/32
NC040CPO*RBC	3.9998	101.595	4.7503	120.658	0.3750	9.525	4.281	108.74	4.469	113.51	0.040	1.02	3/16
ND040CPO*RBC	3.9998	101.595	5.0003	127.008	0.5000	12.700	4.375	111.13	4.625	117.48	0.060	1.52	1/4
NF040CPO*RBC	3.9998	101.595	5.5003	139.708	0.7500	19.050	4.563	115.90	4.938	125.43	0.080	2.03	3/8
NG040CPO*RBC	3.9998	101.595	6.0003	152.408	1.0000	25.400	4.750	120.65	5.250	133.35	0.080	2.03	1/2
NA042CPO*RBC	4.2498	107.945	4.7503	120.658	0.2500	6.350	4.438	112.73	4.563	115.90	0.025	0.64	1/8
NB042CPO*RBC	4.2498	107.945	4.8753	123.833	0.3125	7.938	4.484	113.89	4.641	117.88	0.032	0.81	5/32
NC042CPO*RBC	4.2498	107.945	5.0003	127.008	0.3750	9.525	4.531	115.09	4.719	119.86	0.040	1.02	3/16
ND042CPO*RBC	4.2498	107.945	5.2503	133.358	0.5000	12.700	4.625	117.48	4.875	123.83	0.060	1.52	1/4
NF042CPO*RBC	4.2498	107.945	5.7503	146.058	0.7500	19.050	4.813	122.25	5.188	131.78	0.080	2.03	3/8
NG042CPO*RBC	4.2498	107.945	6.2503	158.758	1.0000	25.400	5.000	127.00	5.500	139.70	0.080	2.03	1/2
NA045CPO*RBC	4.4998	114.295	5.0003	127.008	0.2500	6.350	4.688	119.08	4.813	122.25	0.025	0.64	1/8
NB045CPO*RBC	4.4998	114.295	5.1253	130.183	0.3125	7.938	4.734	120.24	4.891	124.23	0.032	0.81	5/32
NC045CPO*RBC	4.4998	114.295	5.2503	133.358	0.3750	9.525	4.781	121.44	4.969	126.21	0.040	1.02	3/16
ND045CPO*RBC	4.4998	114.295	5.5003	139.708	0.5000	12.700	4.875	123.83	5.125	130.18	0.060	1.52	1/4
NF045CPO*RBC	4.4998	114.295	6.0003	152.408	0.7500	19.050	5.063	128.60	5.438	138.13	0.080	2.03	3/8
NG045CPO*RBC	4.4998	114.295	6.5003	165.108	1.0000	25.400	5.250	133.35	5.750	146.05	0.080	2.03	1/2
NA047CPO*RBC	4.7498	120.645	5.2503	133.358	0.2500	6.350	4.938	125.43	5.063	128.60	0.025	0.64	1/8
NB047CPO*RBC	4.7498	120.645	5.3753	136.533	0.3125	7.938	4.984	126.59	5.141	130.58	0.032	0.81	5/32
NC047CPO*RBC	4.7498	120.645	5.5003	139.708	0.3750	9.525	5.031	127.79	5.219	132.56	0.040	1.02	3/16
ND047CPO*RBC	4.7498	120.645	5.7503	146.058	0.5000	12.700	5.125	130.18	5.375	136.53	0.060	1.52	1/4
NF047CPO*RBC	4.7498	120.645	6.2503	158.758	0.7500	19.050	5.313	134.95	5.688	144.48	0.080	2.03	3/8
NG047CPO*RBC	4.7498	120.645	6.7503	171.458	1.0000	25.400	5.500	139.70	6.000	152.40	0.080	2.03	1/2
NA050CPO*RBC	4.9998	126.995	5.5003	139.708	0.2500	6.350	5.188	131.78	5.313	134.95	0.025	0.64	1/8
NB050CPO*RBC	4.9998	126.995	5.6253	142.883	0.3125	7.938	5.234	132.94	5.391	136.93	0.032	0.81	5/32
NC050CPO*RBC	4.9998	126.995	5.7503	146.058	0.3750	9.525	5.281	134.14	5.469	138.91	0.040	1.02	3/16
ND050CPO*RBC	4.9998	126.995	6.0003	152.408	0.5000	12.700	5.375	136.53	5.625	142.88	0.060	1.52	1/4
NF050CPO*RBC	4.9998	126.995	6.5003	165.108	0.7500	19.050	5.563	141.30	5.938	150.83	0.080	2.03	3/8
NG050CPO*RBC	4.9998	126.995	7.0003	177.808	1.0000	25.400	5.750	146.05	6.250	158.75	0.080	2.03	1/2
NA055CPO*RBC	5.4998	139.695	6.0003	152.408	0.2500	6.350	5.688	144.48	5.813	147.65	0.025	0.64	1/8
NB055CPO*RBC	5.4998	139.695	6.1253	155.583	0.3125	7.938	5.734	145.64	5.891	149.63	0.032	0.81	5/32
NC055CPO*RBC	5.4998	139.695	6.2503	158.758	0.3750	9.525	5.781	146.84	5.969	151.61	0.040	1.02	3/16
ND055CPO*RBC	5.4998	139.695	6.5003	165.108	0.5000	12.700	5.875	149.23	6.125	155.58	0.060	1.52	1/4
NF055CPO*RBC	5.4998	139.695	7.0003	177.808	0.7500	19.050	6.063	154.00	6.438	163.53	0.080	2.03	3/8

*The alphanumeric identification system is used under license. Applicable nomenclature position 1: L & R series.

- 52100 Steel with Thin Dense Chrome Coating
- Large Diameter
- Light Weight
- Small Cross Section
- Snap-Over Ball Separator

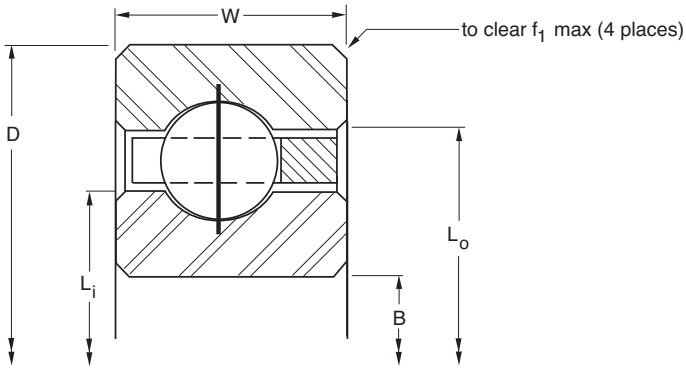

Ball Quantity	Approx. Weight lbs.	Approx. Weight kg	LOAD RATINGS Radial Static lbf	Radial Static N	Radial Dynamic lbf	Radial Dynamic N	Thrust Static lbf	Thrust Static N	Thrust Dynamic lbf	Thrust Dynamic N	Moment Static lbf - in	Moment Static Nm	Moment Dynamic lbf - in	Moment Dynamic Nm	PART NUMBER*
22	0.03	0.014	290	1,290	300	1,330	N/A	N/A	N/A	N/A	N/A	N/A	N/A	N/A	NAA10CLO*RBC
30	0.04	0.018	400	1,780	350	1,560	N/A	N/A	N/A	N/A	N/A	N/A	N/A	N/A	NAA15CLO*RBC
33	0.06	0.027	460	2,050	371	1,650	N/A	N/A	N/A	N/A	N/A	N/A	N/A	N/A	NAA17CLO*RBC
27	0.10	0.045	680	3,020	560	2,490	N/A	N/A	N/A	N/A	N/A	N/A	N/A	N/A	NA020CPO*RBC
23	0.16	0.073	930	4,140	800	3,560	N/A	N/A	N/A	N/A	N/A	N/A	N/A	N/A	NB020CPO*RBC
33	0.13	0.059	830	3,690	610	2,710	N/A	N/A	N/A	N/A	N/A	N/A	N/A	N/A	NA025CPO*RBC
28	0.20	0.091	1,140	5,070	860	3,830	N/A	N/A	N/A	N/A	N/A	N/A	N/A	N/A	NB025CPO*RBC
39	0.15	0.068	990	4,400	650	2,890	N/A	N/A	N/A	N/A	N/A	N/A	N/A	N/A	NA030CPO*RBC
33	0.24	0.109	1,340	5,960	920	4,090	N/A	N/A	N/A	N/A	N/A	N/A	N/A	N/A	NB030CPO*RBC
45	0.18	0.082	1,140	5,070	690	3,070	N/A	N/A	N/A	N/A	N/A	N/A	N/A	N/A	NA035CPO*RBC
38	0.27	0.122	1,540	6,850	970	4,310	N/A	N/A	N/A	N/A	N/A	N/A	N/A	N/A	NB035CPO*RBC
51	0.19	0.086	1,290	5,740	720	3,200	N/A	N/A	N/A	N/A	N/A	N/A	N/A	N/A	NA040CPO*RBC
43	0.30	0.136	1,750	7,780	1,020	4,540	N/A	N/A	N/A	N/A	N/A	N/A	N/A	N/A	NB040CPO*RBC
35	0.45	0.204	2,100	9,340	1,290	5,740	N/A	N/A	N/A	N/A	N/A	N/A	N/A	N/A	NC040CPO*RBC
27	0.78	0.354	3,080	13,700	2,250	10,010	N/A	N/A	N/A	N/A	N/A	N/A	N/A	N/A	ND040CPO*RBC
19	1.90	0.862	5,360	23,840	3,940	17,530	N/A	N/A	N/A	N/A	N/A	N/A	N/A	N/A	NF040CPO*RBC
15	3.60	1.633	8,210	36,520	6,700	29,800	N/A	N/A	N/A	N/A	N/A	N/A	N/A	N/A	NG040CPO*RBC
54	0.20	0.091	1,370	6,090	730	3,250	N/A	N/A	N/A	N/A	N/A	N/A	N/A	N/A	NA042CPO*RBC
45	0.31	0.141	1,830	8,140	1,030	4,580	N/A	N/A	N/A	N/A	N/A	N/A	N/A	N/A	NB042CPO*RBC
37	0.47	0.213	2,220	9,880	1,320	5,870	N/A	N/A	N/A	N/A	N/A	N/A	N/A	N/A	NC042CPO*RBC
28	0.83	0.376	3,190	14,190	2,270	10,100	N/A	N/A	N/A	N/A	N/A	N/A	N/A	N/A	ND042CPO*RBC
20	2.00	0.907	5,640	25,090	4,070	18,100	N/A	N/A	N/A	N/A	N/A	N/A	N/A	N/A	NF042CPO*RBC
15	3.80	1.724	8,210	36,520	6,700	29,800	N/A	N/A	N/A	N/A	N/A	N/A	N/A	N/A	NG042CPO*RBC
57	0.22	0.100	1,440	6,410	750	3,340	N/A	N/A	N/A	N/A	N/A	N/A	N/A	N/A	NA045CPO*RBC
48	0.33	0.150	1,950	8,670	1,060	4,720	N/A	N/A	N/A	N/A	N/A	N/A	N/A	N/A	NB045CPO*RBC
39	0.48	0.218	2,340	10,410	1,350	6,010	N/A	N/A	N/A	N/A	N/A	N/A	N/A	N/A	NC045CPO*RBC
30	0.88	0.399	3,420	15,210	2,350	10,450	N/A	N/A	N/A	N/A	N/A	N/A	N/A	N/A	ND045CPO*RBC
21	2.10	0.953	5,930	26,380	4,210	18,730	N/A	N/A	N/A	N/A	N/A	N/A	N/A	N/A	NF045CPO*RBC
16	4.00	1.814	8,760	38,970	7,000	31,140	N/A	N/A	N/A	N/A	N/A	N/A	N/A	N/A	NG045CPO*RBC
60	0.23	0.104	1,520	6,760	760	3,380	N/A	N/A	N/A	N/A	N/A	N/A	N/A	N/A	NA047CPO*RBC
50	0.34	0.154	2,030	9,030	1,070	4,760	N/A	N/A	N/A	N/A	N/A	N/A	N/A	N/A	NB047CPO*RBC
41	0.50	0.227	2,460	10,940	1,370	6,090	N/A	N/A	N/A	N/A	N/A	N/A	N/A	N/A	NC047CPO*RBC
31	0.94	0.426	3,530	15,700	2,360	10,500	N/A	N/A	N/A	N/A	N/A	N/A	N/A	N/A	ND047CPO*RBC
22	2.20	0.998	6,210	27,620	4,310	19,170	N/A	N/A	N/A	N/A	N/A	N/A	N/A	N/A	NF047CPO*RBC
17	4.10	1.860	9,300	41,370	7,290	32,430	N/A	N/A	N/A	N/A	N/A	N/A	N/A	N/A	NG047CPO*RBC
63	0.24	0.109	1,590	7,070	770	3,430	N/A	N/A	N/A	N/A	N/A	N/A	N/A	N/A	NA050CPO*RBC
53	0.38	0.172	2,150	9,560	1,100	4,890	N/A	N/A	N/A	N/A	N/A	N/A	N/A	N/A	NB050CPO*RBC
43	0.58	0.263	2,590	11,520	1,390	6,180	N/A	N/A	N/A	N/A	N/A	N/A	N/A	N/A	NC050CPO*RBC
33	1.00	0.454	3,760	16,730	2,430	10,810	N/A	N/A	N/A	N/A	N/A	N/A	N/A	N/A	ND050CPO*RBC
23	2.30	1.043	6,490	28,870	4,380	19,480	N/A	N/A	N/A	N/A	N/A	N/A	N/A	N/A	NF050CPO*RBC
18	4.30	1.950	9,850	43,810	7,570	33,670	N/A	N/A	N/A	N/A	N/A	N/A	N/A	N/A	NG050CPO*RBC
69	0.25	0.113	1,750	7,780	800	3,560	N/A	N/A	N/A	N/A	N/A	N/A	N/A	N/A	NA055CPO*RBC
58	0.41	0.186	2,360	10,500	1,130	5,030	N/A	N/A	N/A	N/A	N/A	N/A	N/A	N/A	NB055CPO*RBC
47	0.59	0.268	2,830	12,590	1,440	6,410	N/A	N/A	N/A	N/A	N/A	N/A	N/A	N/A	NC055CPO*RBC
36	1.06	0.481	4,100	18,240	2,510	11,170	N/A	N/A	N/A	N/A	N/A	N/A	N/A	N/A	ND055CPO*RBC
25	2.50	1.134	7,050	31,360	4,540	20,190	N/A	N/A	N/A	N/A	N/A	N/A	N/A	N/A	NF055CPO*RBC

Refer to the Engineering section for load and speed limitations.

RADIAL CONTACT, C-TYPE

THIN SECTION BALL BEARINGS

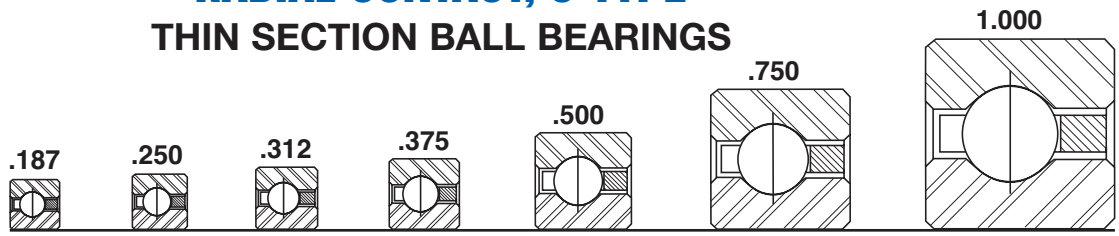

Series:	NAA	NA	NB	NC	ND	NF	NG
Cross Section Size:	3/16"	1/4"	5/16"	3/8"	1/2"	3/4"	1"

PART NUMBER*	NOMINAL DIMENSIONS												
	B Bore		D Outside Diameter		W Width		Land Diameter L_i -Inner Ring		Land Diameter L_o -Outer Ring		f_1 Housing Fillet		Ball Diameter
	in.	mm	in.	mm	in.	mm	in.	mm	in.	mm	in.	mm	in.
NG055CPO*RBC	5.4998	139.695	7.5003	190.508	1.0000	25.400	6.250	158.75	6.750	171.45	0.080	2.03	1/2
NA060CPO*RBC	5.9998	152.395	6.5003	165.108	0.2500	6.350	6.188	157.18	6.313	160.35	0.025	0.64	1/8
NB060CPO*RBC	5.9998	152.395	6.6253	168.283	0.3125	7.938	6.234	158.34	6.391	162.33	0.032	0.81	5/32
NC060CPO*RBC	5.9998	152.395	6.7503	171.458	0.3750	9.525	6.281	159.54	6.469	164.31	0.040	1.02	3/16
ND060CPO*RBC	5.9998	152.395	7.0003	177.808	0.5000	12.700	6.375	161.93	6.625	168.28	0.060	1.52	1/4
NF060CPO*RBC	5.9998	152.395	7.5003	190.508	0.7500	19.050	6.563	166.70	6.938	176.23	0.080	2.03	3/8
NG060CPO*RBC	5.9998	152.395	8.0003	203.208	1.0000	25.400	6.750	171.45	7.250	184.15	0.080	2.03	1/2
NA065CPO*RBC	6.4998	165.095	7.0003	177.808	0.2500	6.350	6.688	169.88	6.813	173.05	0.025	0.64	1/8
NB065CPO*RBC	6.4998	165.095	7.1253	180.983	0.3125	7.938	6.734	171.04	6.891	175.03	0.032	0.81	5/32
NC065CPO*RBC	6.4998	165.095	7.2503	184.158	0.3750	9.525	6.781	172.24	6.969	177.01	0.040	1.02	3/16
ND065CPO*RBC	6.4998	165.095	7.5003	190.508	0.5000	12.700	6.875	174.63	7.125	180.98	0.060	1.52	1/4
NF065CPO*RBC	6.4998	165.095	8.0003	203.208	0.7500	19.050	7.063	179.40	7.438	188.93	0.080	2.03	3/8
NG065CPO*RBC	6.4998	165.095	8.5003	215.908	1.0000	25.400	7.250	184.15	7.750	196.85	0.080	2.03	1/2
NA070CPO*RBC	6.9998	177.795	7.5003	190.508	0.2500	6.350	7.188	182.58	7.313	185.75	0.025	0.64	1/8
NB070CPO*RBC	6.9998	177.795	7.6253	193.683	0.3125	7.938	7.234	183.74	7.391	187.73	0.032	0.81	5/32
NC070CPO*RBC	6.9998	177.795	7.7503	196.858	0.3750	9.525	7.281	184.94	7.469	189.71	0.040	1.02	3/16
ND070CPO*RBC	6.9998	177.795	8.0003	203.208	0.5000	12.700	7.375	187.33	7.625	193.68	0.060	1.52	1/4
NF070CPO*RBC	6.9998	177.795	8.5003	215.908	0.7500	19.050	7.563	192.10	7.938	201.63	0.080	2.03	3/8
NG070CPO*RBC	6.9998	177.795	9.0003	228.608	1.0000	25.400	7.750	196.85	8.250	209.55	0.080	2.03	1/2
NA075CPO*RBC	7.4998	190.495	8.0003	203.208	0.2500	6.350	7.688	195.28	7.813	198.45	0.025	0.64	1/8
NB075CPO*RBC	7.4998	190.495	8.1253	206.383	0.3125	7.938	7.734	196.44	7.891	200.43	0.032	0.81	5/32
NC075CPO*RBC	7.4998	190.495	8.2503	209.558	0.3750	9.525	7.781	197.64	7.969	202.41	0.040	1.02	3/16
ND075CPO*RBC	7.4998	190.495	8.5003	215.908	0.5000	12.700	7.875	200.03	8.125	206.38	0.060	1.52	1/4
NF075CPO*RBC	7.4998	190.495	9.0003	228.608	0.7500	19.050	8.063	204.80	8.438	214.33	0.080	2.03	3/8
NG075CPO*RBC	7.4998	190.495	9.5003	241.308	1.0000	25.400	8.250	209.55	8.750	222.25	0.080	2.03	1/2
NA080CPO*RBC	7.9998	203.195	8.5003	215.908	0.2500	6.350	8.188	207.98	8.313	211.15	0.025	0.64	1/8
NB080CPO*RBC	7.9998	203.195	8.6253	219.083	0.3125	7.938	8.234	209.14	8.391	213.13	0.032	0.81	5/32
NC080CPO*RBC	7.9998	203.195	8.7503	222.258	0.3750	9.525	8.281	210.34	8.469	215.11	0.040	1.02	3/16
ND080CPO*RBC	7.9998	203.195	9.0003	228.608	0.5000	12.700	8.375	212.73	8.625	219.08	0.060	1.52	1/4
NF080CPO*RBC	7.9998	203.195	9.5003	241.308	0.7500	19.050	8.563	217.50	8.938	227.03	0.080	2.03	3/8
NG080CPO*RBC	7.9998	203.195	10.0003	254.008	1.0000	25.400	8.750	222.25	9.250	234.95	0.080	2.03	1/2
NA090CPO*RBC	8.9998	228.595	9.5003	241.308	0.2500	6.350	9.188	233.38	9.313	236.55	0.025	0.64	1/8
NB090CPO*RBC	8.9998	228.595	9.6253	244.483	0.3125	7.938	9.234	234.54	9.391	238.53	0.032	0.81	5/32
NC090CPO*RBC	8.9998	228.595	9.7503	247.658	0.3750	9.525	9.281	235.74	9.469	240.51	0.040	1.02	3/16
ND090CPO*RBC	8.9998	228.595	10.0003	254.008	0.5000	12.700	9.375	238.13	9.625	244.48	0.060	1.52	1/4
NF090CPO*RBC	8.9998	228.595	10.5003	266.708	0.7500	19.050	9.563	242.90	9.938	252.43	0.080	2.03	3/8
NG090CPO*RBC	8.9998	228.595	11.0003	279.408	1.0000	25.400	9.750	247.65	10.250	260.35	0.080	2.03	1/2
NA100CPO*RBC	9.9998	253.995	10.5003	266.708	0.2500	6.350	10.188	258.78	10.313	261.95	0.025	0.64	1/8
NB100CPO*RBC	9.9998	253.995	10.6253	269.883	0.3125	7.938	10.234	259.94	10.391	263.93	0.032	0.81	5/32
NC100CPO*RBC	9.9998	253.995	10.7503	273.058	0.3750	9.525	10.281	261.14	10.469	265.91	0.040	1.02	3/16
ND100CPO*RBC	9.9998	253.995	11.0003	279.408	0.5000	12.700	10.375	263.53	10.625	269.88	0.060	1.52	1/4
NF100CPO*RBC	9.9998	253.995	11.5003	292.108	0.7500	19.050	10.563	268.30	10.938	277.83	0.080	2.03	3/8
NG100CPO*RBC	9.9998	253.995	12.0003	304.808	1.0000	25.400	10.750	273.05	11.250	285.75	0.080	2.03	1/2

*The alphanumeric identification system is used under license. Applicable nomenclature position 1: L & R series.

- 52100 Steel with Thin Dense Chrome Coating
- Large Diameter
- Light Weight
- Small Cross Section
- Snap-Over Ball Separator

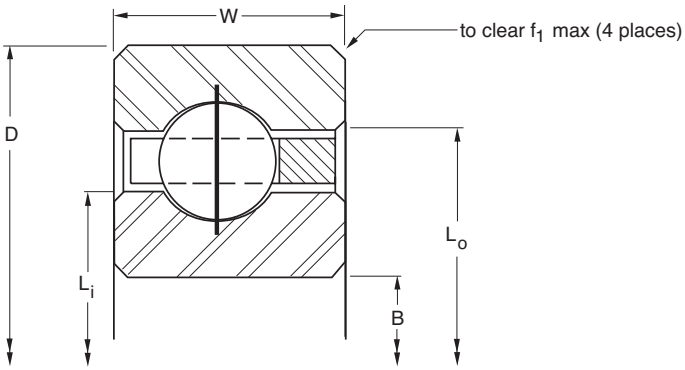

Ball Quantity	Approx. Weight lbs.	Approx. Weight kg	Radial Static lbf	Radial Static N	Radial Dynamic lbf	Radial Dynamic N	Thrust Static lbf	Thrust Static N	Thrust Dynamic lbf	Thrust Dynamic N	Moment Static lbf - in	Moment Static Nm	Moment Dynamic lbf - in	Moment Dynamic Nm	PART NUMBER*
19	4.70	2.132	10,400	46,260	7,850	34,920	N/A	N/A	N/A	N/A	N/A	N/A	N/A	N/A	NG055CPO*RBC
75	0.28	0.127	1,900	8,450	830	3,690	N/A	N/A	N/A	N/A	N/A	N/A	N/A	N/A	NA060CPO*RBC
63	0.44	0.200	2,560	11,390	1,170	5,200	N/A	N/A	N/A	N/A	N/A	N/A	N/A	N/A	NB060CPO*RBC
51	0.63	0.286	3,070	13,660	1,490	6,630	N/A	N/A	N/A	N/A	N/A	N/A	N/A	N/A	NC060CPO*RBC
39	1.16	0.526	4,450	19,790	2,580	11,480	N/A	N/A	N/A	N/A	N/A	N/A	N/A	N/A	ND060CPO*RBC
27	2.70	1.225	7,620	33,900	4,660	20,730	N/A	N/A	N/A	N/A	N/A	N/A	N/A	N/A	NF060CPO*RBC
21	5.10	2.313	11,490	51,110	8,390	37,320	N/A	N/A	N/A	N/A	N/A	N/A	N/A	N/A	NG060CPO*RBC
81	0.30	0.136	2,050	9,120	850	3,780	N/A	N/A	N/A	N/A	N/A	N/A	N/A	N/A	NA065CPO*RBC
68	0.47	0.213	2,760	12,280	1,200	5,340	N/A	N/A	N/A	N/A	N/A	N/A	N/A	N/A	NB065CPO*RBC
55	0.68	0.308	3,310	14,720	1,530	6,810	N/A	N/A	N/A	N/A	N/A	N/A	N/A	N/A	NC065CPO*RBC
42	1.22	0.553	4,790	21,310	2,650	11,790	N/A	N/A	N/A	N/A	N/A	N/A	N/A	N/A	ND065CPO*RBC
29	2.90	1.315	8,180	36,390	4,790	21,310	N/A	N/A	N/A	N/A	N/A	N/A	N/A	N/A	NF065CPO*RBC
22	5.40	2.449	12,040	53,560	8,520	37,900	N/A	N/A	N/A	N/A	N/A	N/A	N/A	N/A	NG065CPO*RBC
87	0.31	0.141	2,200	9,790	870	3,870	N/A	N/A	N/A	N/A	N/A	N/A	N/A	N/A	NA070CPO*RBC
73	0.50	0.227	2,970	13,210	1,240	5,520	N/A	N/A	N/A	N/A	N/A	N/A	N/A	N/A	NB070CPO*RBC
59	0.73	0.331	3,550	15,790	1,570	6,980	N/A	N/A	N/A	N/A	N/A	N/A	N/A	N/A	NC070CPO*RBC
45	1.31	0.594	5,130	22,820	2,730	12,140	N/A	N/A	N/A	N/A	N/A	N/A	N/A	N/A	ND070CPO*RBC
31	3.20	1.451	8,750	38,920	4,920	21,890	N/A	N/A	N/A	N/A	N/A	N/A	N/A	N/A	NF070CPO*RBC
24	5.80	2.631	13,130	58,410	8,880	39,500	N/A	N/A	N/A	N/A	N/A	N/A	N/A	N/A	NG070CPO*RBC
93	0.34	0.154	2,350	10,450	890	3,960	N/A	N/A	N/A	N/A	N/A	N/A	N/A	N/A	NA075CPO*RBC
78	0.53	0.240	3,170	14,100	1,280	5,690	N/A	N/A	N/A	N/A	N/A	N/A	N/A	N/A	NB075CPO*RBC
63	0.78	0.354	3,790	16,860	1,600	7,120	N/A	N/A	N/A	N/A	N/A	N/A	N/A	N/A	NC075CPO*RBC
48	1.41	0.640	5,470	24,330	2,800	12,460	N/A	N/A	N/A	N/A	N/A	N/A	N/A	N/A	ND075CPO*RBC
33	3.40	1.542	9,310	41,410	5,040	22,420	N/A	N/A	N/A	N/A	N/A	N/A	N/A	N/A	NF075CPO*RBC
25	6.10	2.767	13,680	60,850	8,960	39,860	N/A	N/A	N/A	N/A	N/A	N/A	N/A	N/A	NG075CPO*RBC
99	0.38	0.172	2,500	11,120	910	4,050	N/A	N/A	N/A	N/A	N/A	N/A	N/A	N/A	NA080CPO*RBC
83	0.57	0.259	3,370	14,990	1,280	5,690	N/A	N/A	N/A	N/A	N/A	N/A	N/A	N/A	NB080CPO*RBC
67	0.84	0.381	4,030	17,930	1,650	7,340	N/A	N/A	N/A	N/A	N/A	N/A	N/A	N/A	NC080CPO*RBC
51	1.53	0.694	5,810	25,840	2,860	12,720	N/A	N/A	N/A	N/A	N/A	N/A	N/A	N/A	ND080CPO*RBC
35	3.50	1.588	9,880	43,950	5,140	22,860	N/A	N/A	N/A	N/A	N/A	N/A	N/A	N/A	NF080CPO*RBC
27	6.50	2.948	14,770	65,700	9,300	41,370	N/A	N/A	N/A	N/A	N/A	N/A	N/A	N/A	NG080CPO*RBC
111	0.44	0.200	2,810	12,500	940	4,180	N/A	N/A	N/A	N/A	N/A	N/A	N/A	N/A	NA090CPO*RBC
93	0.66	0.299	3,780	16,810	1,330	5,920	N/A	N/A	N/A	N/A	N/A	N/A	N/A	N/A	NB090CPO*RBC
75	0.94	0.426	4,510	20,060	1,730	7,700	N/A	N/A	N/A	N/A	N/A	N/A	N/A	N/A	NC090CPO*RBC
57	1.72	0.780	6,500	28,910	2,970	13,210	N/A	N/A	N/A	N/A	N/A	N/A	N/A	N/A	ND090CPO*RBC
39	3.90	1.769	11,000	48,930	5,360	23,840	N/A	N/A	N/A	N/A	N/A	N/A	N/A	N/A	NF090CPO*RBC
30	7.20	3.266	16,420	73,040	9,720	43,240	N/A	N/A	N/A	N/A	N/A	N/A	N/A	N/A	NG090CPO*RBC
123	0.50	0.227	3,110	13,830	990	4,400	N/A	N/A	N/A	N/A	N/A	N/A	N/A	N/A	NA100CPO*RBC
103	0.73	0.331	4,190	18,640	1,400	6,230	N/A	N/A	N/A	N/A	N/A	N/A	N/A	N/A	NB100CPO*RBC
83	1.06	0.481	4,990	22,200	1,781	7,920	N/A	N/A	N/A	N/A	N/A	N/A	N/A	N/A	NC100CPO*RBC
63	1.88	0.853	7,180	31,940	3,070	13,660	N/A	N/A	N/A	N/A	N/A	N/A	N/A	N/A	ND100CPO*RBC
43	4.30	1.950	12,130	53,960	5,550	24,690	N/A	N/A	N/A	N/A	N/A	N/A	N/A	N/A	NF100CPO*RBC
33	7.90	3.583	18,060	80,330	10,040	44,660	N/A	N/A	N/A	N/A	N/A	N/A	N/A	N/A	NG100CPO*RBC

Refer to the Engineering section for load and speed limitations.

RADIAL CONTACT, C-TYPE

THIN SECTION BALL BEARINGS

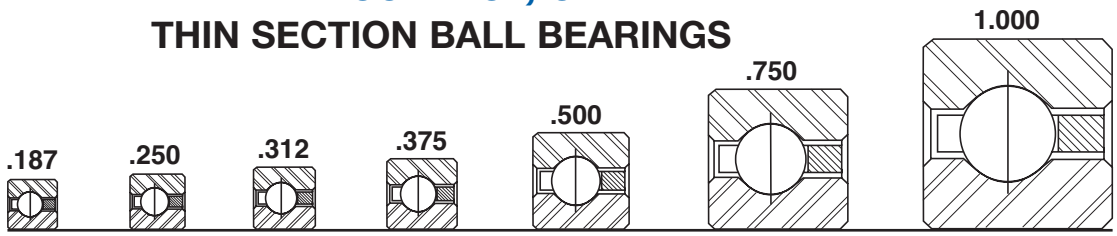

Series:	NAA	NA	NB	NC	ND	NF	NG
Cross Section Size:	3/16"	1/4"	5/16"	3/8"	1/2"	3/4"	1"

PART NUMBER*	NOMINAL DIMENSIONS												
	B Bore		D Outside Diameter		W Width		Land Diameter L_i -Inner Ring		Land Diameter L_o -Outer Ring		f_1 Housing Fillet		Ball Diameter
	in.	mm	in.	mm	in.	mm	in.	mm	in.	mm	in.	mm	in.
NA110CPO*RBC	10.9998	279.395	11.5003	292.108	0.2500	6.350	11.188	284.18	11.313	287.35	0.025	0.64	1/8
NB110CPO*RBC	10.9998	279.395	11.6253	295.283	0.3125	7.938	11.234	285.34	11.391	289.33	0.032	0.81	5/32
NC110CPO*RBC	10.9998	279.395	11.7503	298.458	0.3750	9.525	11.281	286.54	11.469	291.31	0.040	1.02	3/16
ND110CPO*RBC	10.9998	279.395	12.0003	304.808	0.5000	12.700	11.375	288.93	11.625	295.28	0.060	1.52	1/4
NF110CPO*RBC	10.9998	279.395	12.5003	317.508	0.7500	19.050	11.563	293.70	11.938	303.23	0.080	2.03	3/8
NG110CPO*RBC	10.9998	279.395	13.0003	330.208	1.0000	25.400	11.750	298.45	12.250	311.15	0.080	2.03	1/2
NA120CPO*RBC	11.9998	304.795	12.5003	317.508	0.2500	6.350	12.188	309.58	12.313	312.75	0.025	0.64	1/8
NB120CPO*RBC	11.9998	304.795	12.6253	320.683	0.3125	7.938	12.234	310.74	12.391	314.73	0.032	0.81	5/32
NC120CPO*RBC	11.9998	304.795	12.7503	323.858	0.3750	9.525	12.281	311.94	12.469	316.71	0.040	1.02	3/16
ND120CPO*RBC	11.9998	304.795	13.0003	330.208	0.5000	12.700	12.375	314.33	12.625	320.68	0.060	1.52	1/4
NF120CPO*RBC	11.9998	304.795	13.5003	342.908	0.7500	19.050	12.563	319.10	12.938	328.63	0.080	2.03	3/8
NG120CPO*RBC	11.9998	304.795	14.0003	355.608	1.0000	25.400	12.750	323.85	13.250	336.55	0.080	2.03	1/2
NB140CPO*RBC	13.9998	355.595	14.6253	371.483	0.3125	7.938	14.234	361.54	14.391	365.53	0.032	0.81	5/32
NC140CPO*RBC	13.9998	355.595	14.7503	374.658	0.3750	9.525	14.281	362.74	14.469	367.51	0.040	1.02	3/16
ND140CPO*RBC	13.9998	355.595	15.0003	381.008	0.5000	12.700	14.375	365.13	14.625	371.48	0.060	1.52	1/4
NF140CPO*RBC	13.9998	355.595	15.5003	393.708	0.7500	19.050	14.563	369.90	14.938	379.43	0.080	2.03	3/8
NG140CPO*RBC	13.9998	355.595	16.0003	406.408	1.0000	25.400	14.750	374.65	15.250	387.35	0.080	2.03	1/2
NB160CPO*RBC	15.9998	406.395	16.6253	422.283	0.3125	7.938	16.234	412.34	16.391	416.33	0.032	0.81	5/32
NC160CPO*RBC	15.9998	406.395	16.7503	425.458	0.3750	9.525	16.281	413.54	16.469	418.31	0.040	1.02	3/16
ND160CPO*RBC	15.9998	406.395	17.0003	431.808	0.5000	12.700	16.375	415.93	16.625	422.28	0.060	1.52	1/4
NF160CPO*RBC	15.9998	406.395	17.5003	444.508	0.7500	19.050	16.563	420.70	16.938	430.23	0.080	2.03	3/8
NG160CPO*RBC	15.9998	406.395	18.0003	457.208	1.0000	25.400	16.750	425.45	17.250	438.15	0.080	2.03	1/2
NB180CPO*RBC	17.9998	457.195	18.6253	473.083	0.3125	7.938	18.234	463.14	18.391	467.13	0.032	0.81	5/32
NC180CPO*RBC	17.9998	457.195	18.7503	476.258	0.3750	9.525	18.281	464.34	18.469	469.11	0.040	1.02	3/16
ND180CPO*RBC	17.9998	457.195	19.0003	482.608	0.5000	12.700	18.375	466.73	18.625	473.08	0.060	1.52	1/4
NF180CPO*RBC	17.9998	457.195	19.5003	495.308	0.7500	19.050	18.563	471.50	18.938	481.03	0.080	2.03	3/8
NG180CPO*RBC	17.9998	457.195	20.0003	508.008	1.0000	25.400	18.750	476.25	19.250	488.95	0.080	2.03	1/2
NB200CPO*RBC	19.9998	507.995	20.6253	523.883	0.3125	7.938	20.234	513.94	20.391	517.93	0.032	0.81	5/32
NC200CPO*RBC	19.9998	507.995	20.7503	527.058	0.3750	9.525	20.281	515.14	20.469	519.91	0.040	1.02	3/16
ND200CPO*RBC	19.9998	507.995	21.0003	533.408	0.5000	12.700	20.375	517.53	20.625	523.88	0.060	1.52	1/4
NF200CPO*RBC	19.9998	507.995	21.5003	546.108	0.7500	19.050	20.563	522.30	20.938	531.83	0.080	2.03	3/8
NG200CPO*RBC	19.9998	507.995	22.0003	558.808	1.0000	25.400	20.750	527.05	21.250	539.75	0.080	2.03	1/2
NC250CPO*RBC	24.9998	634.995	25.7503	654.058	0.3750	9.525	25.281	642.14	25.469	646.91	0.040	1.02	3/16
ND250CPO*RBC	24.9998	634.995	26.0003	660.408	0.5000	12.700	25.375	644.53	25.625	650.88	0.060	1.52	1/4
NF250CPO*RBC	24.9998	634.995	26.5003	673.108	0.7500	19.050	25.563	649.30	25.938	658.83	0.080	2.03	3/8
NG250CPO*RBC	24.9998	634.995	27.0003	685.808	1.0000	25.400	25.750	654.05	26.250	666.75	0.080	2.03	1/2
NC300CPO*RBC	29.9998	761.995	30.7503	781.058	0.3750	9.525	30.281	769.14	30.469	773.91	0.040	1.02	3/16
ND300CPO*RBC	29.9998	761.995	31.0003	787.408	0.5000	12.700	30.375	771.53	30.625	777.88	0.060	1.52	1/4
NF300CPO*RBC	29.9998	761.995	31.5003	800.108	0.7500	19.050	30.563	776.30	30.938	785.83	0.080	2.03	3/8
NG300CPO*RBC	29.9998	761.995	32.0003	812.808	1.0000	25.400	30.750	781.05	31.250	793.75	0.080	2.03	1/2
NF350CPO*RBC	34.9998	888.995	36.5003	927.108	0.7500	19.050	35.563	903.30	35.938	912.83	0.080	2.03	3/8
NG350CPO*RBC	34.9998	888.995	37.0003	939.808	1.0000	25.400	35.750	908.05	36.250	920.75	0.080	2.03	1/2
NF400CPO*RBC	39.9998	1015.995	41.5003	1054.108	0.7500	19.050	40.563	1030.30	40.938	1039.83	0.080	2.03	3/8
NG400CPO*RBC	39.9998	1015.995	42.0003	1066.808	1.0000	25.400	40.750	1035.05	41.250	1047.75	0.080	2.03	1/2

*The alphanumeric identification system is used under license. Applicable nomenclature position 1: L & R series.

- 52100 Steel with Thin Dense Chrome Coating
- Large Diameter
- Light Weight
- Small Cross Section
- Snap-Over Ball Separator

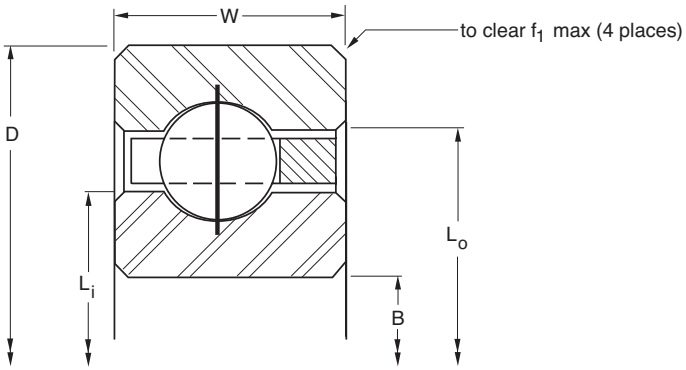

Ball Quantity	Approx. Weight		LOAD RATINGS												PART NUMBER*
			Radial				Thrust				Moment				
			Static		Dynamic		Static		Dynamic		Static		Dynamic		
	lbs.	kg	lbf	N	lbf	N	lbf	N	lbf	N	lbf - in	Nm	lbf - in	Nm	
135	0.52	0.236	3,410	15,170	1,030	4,580	N/A	N/A	N/A	N/A	N/A	N/A	N/A	N/A	NA110CPO*RBC
113	0.75	0.340	4,590	20,420	1,464	6,510	N/A	N/A	N/A	N/A	N/A	N/A	N/A	N/A	NB110CPO*RBC
91	1.16	0.526	5,470	24,330	1,879	8,360	N/A	N/A	N/A	N/A	N/A	N/A	N/A	N/A	NC110CPO*RBC
69	2.06	0.934	7,870	35,010	3,180	14,150	N/A	N/A	N/A	N/A	N/A	N/A	N/A	N/A	ND110CPO*RBC
47	4.80	2.177	13,260	58,980	5,833	25,950	N/A	N/A	N/A	N/A	N/A	N/A	N/A	N/A	NF110CPO*RBC
36	8.60	3.901	19,700	87,630	10,360	46,080	N/A	N/A	N/A	N/A	N/A	N/A	N/A	N/A	NG110CPO*RBC
147	0.56	0.254	3,720	16,550	1,078	4,800	N/A	N/A	N/A	N/A	N/A	N/A	N/A	N/A	NA120CPO*RBC
123	0.83	0.376	5,000	22,240	1,539	6,850	N/A	N/A	N/A	N/A	N/A	N/A	N/A	N/A	NB120CPO*RBC
99	1.25	0.567	5,950	26,470	1,974	8,780	N/A	N/A	N/A	N/A	N/A	N/A	N/A	N/A	NC120CPO*RBC
75	2.25	1.021	8,550	38,030	3,320	14,770	N/A	N/A	N/A	N/A	N/A	N/A	N/A	N/A	ND120CPO*RBC
51	5.20	2.359	14,390	64,010	6,105	27,160	N/A	N/A	N/A	N/A	N/A	N/A	N/A	N/A	NF120CPO*RBC
39	9.30	4.218	21,340	94,930	10,690	47,550	N/A	N/A	N/A	N/A	N/A	N/A	N/A	N/A	NG120CPO*RBC
143	1.05	0.476	5,810	25,840	1,680	7,470	N/A	N/A	N/A	N/A	N/A	N/A	N/A	N/A	NB140CPO*RBC
115	1.52	0.689	6,910	30,740	2,154	9,580	N/A	N/A	N/A	N/A	N/A	N/A	N/A	N/A	NC140CPO*RBC
87	2.73	1.238	9,920	44,130	3,460	15,390	N/A	N/A	N/A	N/A	N/A	N/A	N/A	N/A	ND140CPO*RBC
59	6.00	2.722	16,650	74,060	6,620	29,450	N/A	N/A	N/A	N/A	N/A	N/A	N/A	N/A	NF140CPO*RBC
45	10.80	4.899	24,620	109,520	11,280	50,180	N/A	N/A	N/A	N/A	N/A	N/A	N/A	N/A	NG140CPO*RBC
163	1.20	0.544	6,620	29,450	1,812	8,060	N/A	N/A	N/A	N/A	N/A	N/A	N/A	N/A	NB160CPO*RBC
131	1.73	0.785	7,880	35,050	2,321	10,320	N/A	N/A	N/A	N/A	N/A	N/A	N/A	N/A	NC160CPO*RBC
99	3.10	1.406	11,290	50,220	3,688	16,410	N/A	N/A	N/A	N/A	N/A	N/A	N/A	N/A	ND160CPO*RBC
67	7.10	3.221	18,900	84,070	7,104	31,600	N/A	N/A	N/A	N/A	N/A	N/A	N/A	N/A	NF160CPO*RBC
51	12.30	5.579	27,910	124,150	11,820	52,580	N/A	N/A	N/A	N/A	N/A	N/A	N/A	N/A	NG160CPO*RBC
183	1.35	0.612	7,440	33,090	1,936	8,610	N/A	N/A	N/A	N/A	N/A	N/A	N/A	N/A	NB180CPO*RBC
147	1.94	0.880	8,840	39,320	2,478	11,020	N/A	N/A	N/A	N/A	N/A	N/A	N/A	N/A	NC180CPO*RBC
111	3.48	1.579	12,650	56,270	3,933	17,490	N/A	N/A	N/A	N/A	N/A	N/A	N/A	N/A	ND180CPO*RBC
75	7.90	3.583	21,160	94,120	7,557	33,620	N/A	N/A	N/A	N/A	N/A	N/A	N/A	N/A	NF180CPO*RBC
57	13.70	6.214	31,190	138,740	12,367	55,010	N/A	N/A	N/A	N/A	N/A	N/A	N/A	N/A	NG180CPO*RBC
203	1.50	0.680	8,250	36,700	2,053	9,130	N/A	N/A	N/A	N/A	N/A	N/A	N/A	N/A	NB200CPO*RBC
163	2.16	0.980	9,800	43,590	2,626	11,680	N/A	N/A	N/A	N/A	N/A	N/A	N/A	N/A	NC200CPO*RBC
123	3.85	1.746	14,020	62,360	4,164	18,520	N/A	N/A	N/A	N/A	N/A	N/A	N/A	N/A	ND200CPO*RBC
83	8.90	4.037	23,420	104,180	7,986	35,520	N/A	N/A	N/A	N/A	N/A	N/A	N/A	N/A	NF200CPO*RBC
63	15.80	7.167	34,470	153,330	13,044	58,020	N/A	N/A	N/A	N/A	N/A	N/A	N/A	N/A	NG200CPO*RBC
203	2.69	1.220	12,200	54,270	2,962	13,180	N/A	N/A	N/A	N/A	N/A	N/A	N/A	N/A	NC250CPO*RBC
153	4.79	2.173	17,440	77,580	4,689	20,860	N/A	N/A	N/A	N/A	N/A	N/A	N/A	N/A	ND250CPO*RBC
103	10.90	4.944	29,060	129,270	8,963	39,870	N/A	N/A	N/A	N/A	N/A	N/A	N/A	N/A	NF250CPO*RBC
78	19.50	8.845	42,680	189,850	14,591	64,900	N/A	N/A	N/A	N/A	N/A	N/A	N/A	N/A	NG250CPO*RBC
243	3.21	1.456	14,610	64,990	3,260	14,500	N/A	N/A	N/A	N/A	N/A	N/A	N/A	N/A	NC300CPO*RBC
183	5.73	2.599	20,860	92,790	5,153	22,920	N/A	N/A	N/A	N/A	N/A	N/A	N/A	N/A	ND300CPO*RBC
123	13.00	5.897	34,700	154,350	9,828	43,720	N/A	N/A	N/A	N/A	N/A	N/A	N/A	N/A	NF300CPO*RBC
93	23.30	10.569	50,890	226,370	15,963	71,010	N/A	N/A	N/A	N/A	N/A	N/A	N/A	N/A	NG300CPO*RBC
143	15.10	6.849	40,350	179,490	10,603	47,160	N/A	N/A	N/A	N/A	N/A	N/A	N/A	N/A	NF350CPO*RBC
108	27.10	12.292	59,100	262,890	17,195	76,490	N/A	N/A	N/A	N/A	N/A	N/A	N/A	N/A	NG350CPO*RBC
163	17.20	7.802	45,990	204,570	11,302	50,270	N/A	N/A	N/A	N/A	N/A	N/A	N/A	N/A	NF400CPO*RBC
123	30.80	13.971	67,310	299,410	18,307	81,430	N/A	N/A	N/A	N/A	N/A	N/A	N/A	N/A	NG400CPO*RBC

Refer to the Engineering section for load and speed limitations.

ANGULAR CONTACT, A-TYPE

THIN SECTION BALL BEARINGS

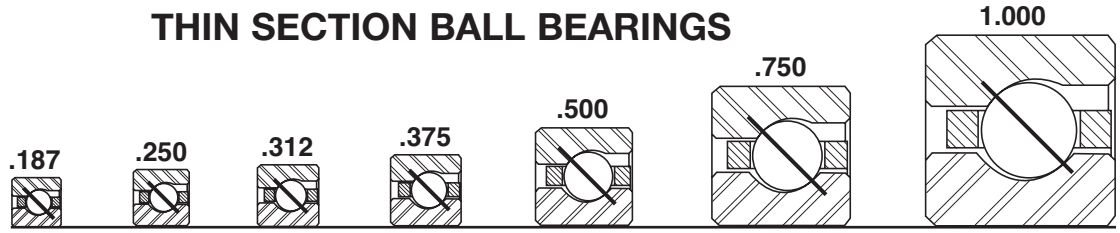

Series:	NAA	NA	NB	NC	ND	NF	NG
Cross Section Size:	3/16"	1/4"	5/16"	3/8"	1/2"	3/4"	1"

PART NUMBER*	NOMINAL DIMENSIONS														
	B Bore		D Outside Diameter		W Width		Land Diameter						f_1 Housing Fillet		Ball Diameter
							L_i -Inner Ring		L_o -Outer Ring		L_s -Counter Bore				
	in.	mm	in.	mm	in.	mm	in.	mm	in.	mm	in.	mm	in.	mm	in.
NAA10AGO*RBC	1.0000	25.400	1.3752	34.930	0.1875	4.763	1.141	28.98	1.234	31.34	1.235	31.37	0.015	0.38	3/32
NAA15AGO*RBC	1.5000	38.100	1.8752	47.630	0.1875	4.763	1.641	41.68	1.734	44.04	1.735	44.07	0.015	0.38	3/32
NAA17AGO*RBC	1.7500	44.450	2.1252	53.980	0.1875	4.763	1.890	48.01	1.985	50.42	2.024	51.41	0.015	0.38	3/32
NA020ARO*RBC	2.0000	50.800	2.5002	63.505	0.2500	6.350	2.188	55.58	2.313	58.75	2.375	60.33	0.025	0.64	1/8
NB020ARO*RBC	2.0000	50.800	2.6252	66.680	0.3125	7.938	2.234	56.74	2.391	60.73	2.469	62.71	0.032	0.81	5/32
NA025ARO*RBC	2.5000	63.500	3.0002	76.205	0.2500	6.350	2.688	68.28	2.813	71.45	2.875	73.03	0.025	0.64	1/8
NB025ARO*RBC	2.5000	63.500	3.1252	79.380	0.3125	7.938	2.734	69.44	2.891	73.43	2.969	75.41	0.032	0.81	5/32
NA030ARO*RBC	3.0000	76.200	3.5002	88.905	0.2500	6.350	3.188	80.98	3.313	84.15	3.375	85.73	0.025	0.64	1/8
NB030ARO*RBC	3.0000	76.200	3.6252	92.080	0.3125	7.938	3.234	82.14	3.391	86.13	3.469	88.11	0.032	0.81	5/32
NA035ARO*RBC	3.5000	88.900	4.0002	101.605	0.2500	6.350	3.688	93.68	3.813	96.85	3.875	98.43	0.025	0.64	1/8
NB035ARO*RBC	3.5000	88.900	4.1252	104.780	0.3125	7.938	3.734	94.84	3.891	98.83	3.969	100.81	0.032	0.81	5/32
NA040ARO*RBC	3.9998	101.595	4.5003	114.308	0.2500	6.350	4.188	106.38	4.313	109.55	4.375	111.13	0.025	0.64	1/8
NB040ARO*RBC	3.9998	101.595	4.6253	117.483	0.3125	7.938	4.234	107.54	4.391	111.53	4.469	113.51	0.032	0.81	5/32
NC040ARO*RBC	3.9998	101.595	4.7503	120.658	0.3750	9.525	4.281	108.74	4.469	113.51	4.563	115.90	0.040	1.02	3/16
ND040ARO*RBC	3.9998	101.595	5.0003	127.008	0.5000	12.700	4.375	111.13	4.625	117.48	4.750	120.65	0.060	1.52	1/4
NF040ARO*RBC	3.9998	101.595	5.5003	139.708	0.7500	19.050	4.563	115.90	4.938	125.43	5.125	130.18	0.080	2.03	3/8
NG040ARO*RBC	3.9998	101.595	6.0003	152.408	1.0000	25.400	4.750	120.65	5.250	133.35	5.500	139.70	0.080	2.03	1/2
NA042ARO*RBC	4.2498	107.945	4.7503	120.658	0.2500	6.350	4.438	112.73	4.563	115.90	4.625	117.48	0.025	0.64	1/8
NB042ARO*RBC	4.2498	107.945	4.8753	123.833	0.3125	7.938	4.484	113.89	4.641	117.88	4.719	119.86	0.032	0.81	5/32
NC042ARO*RBC	4.2498	107.945	5.0003	127.008	0.3750	9.525	4.531	115.09	4.719	119.86	4.813	122.25	0.040	1.02	3/16
ND042ARO*RBC	4.2498	107.945	5.2503	133.358	0.5000	12.700	4.625	117.48	4.875	123.83	5.000	127.00	0.060	1.52	1/4
NF042ARO*RBC	4.2498	107.945	5.7503	146.058	0.7500	19.050	4.813	122.25	5.188	131.78	5.375	136.53	0.080	2.03	3/8
NG042ARO*RBC	4.2498	107.945	6.2503	158.758	1.0000	25.400	5.000	127.00	5.500	139.70	5.750	146.05	0.080	2.03	1/2
NA045ARO*RBC	4.4998	114.295	5.0003	127.008	0.2500	6.350	4.688	119.08	4.813	122.25	4.875	123.83	0.025	0.64	1/8
NB045ARO*RBC	4.4998	114.295	5.1253	130.183	0.3125	7.938	4.734	120.24	4.891	124.23	4.969	126.21	0.032	0.81	5/32
NC045ARO*RBC	4.4998	114.295	5.2503	133.358	0.3750	9.525	4.781	121.44	4.969	126.21	5.063	128.60	0.040	1.02	3/16
ND045ARO*RBC	4.4998	114.295	5.5003	139.708	0.5000	12.700	4.875	123.83	5.125	130.18	5.250	133.35	0.060	1.52	1/4
NF045ARO*RBC	4.4998	114.295	6.0003	152.408	0.7500	19.050	5.063	128.60	5.438	138.13	5.625	142.88	0.080	2.03	3/8
NG045ARO*RBC	4.4998	114.295	6.5003	165.108	1.0000	25.400	5.250	133.35	5.750	146.05	6.000	152.40	0.080	2.03	1/2
NA047ARO*RBC	4.7498	120.645	5.2503	133.358	0.2500	6.350	4.938	125.43	5.063	128.60	5.125	130.18	0.025	0.64	1/8
NB047ARO*RBC	4.7498	120.645	5.3753	136.533	0.3125	7.938	4.984	126.59	5.141	130.58	5.219	132.56	0.032	0.81	5/32
NC047ARO*RBC	4.7498	120.645	5.5003	139.708	0.3750	9.525	5.031	127.79	5.219	132.56	5.313	134.95	0.040	1.02	3/16
ND047ARO*RBC	4.7498	120.645	5.7503	146.058	0.5000	12.700	5.125	130.18	5.375	136.53	5.500	139.70	0.060	1.52	1/4
NF047ARO*RBC	4.7498	120.645	6.2503	158.758	0.7500	19.050	5.313	134.95	5.688	144.48	5.875	149.23	0.080	2.03	3/8
NG047ARO*RBC	4.7498	120.645	6.7503	171.458	1.0000	25.400	5.500	139.70	6.000	152.40	6.250	158.75	0.080	2.03	1/2
NA050ARO*RBC	4.9998	126.995	5.5003	139.708	0.2500	6.350	5.188	131.78	5.313	134.95	5.375	136.53	0.025	0.64	1/8
NB050ARO*RBC	4.9998	126.995	5.6253	142.883	0.3125	7.938	5.234	132.94	5.391	136.93	5.469	138.91	0.032	0.81	5/32
NC050ARO*RBC	4.9998	126.995	5.7503	146.058	0.3750	9.525	5.281	134.14	5.469	138.91	5.563	141.30	0.040	1.02	3/16
ND050ARO*RBC	4.9998	126.995	6.0003	152.408	0.5000	12.700	5.375	136.53	5.625	142.88	5.750	146.05	0.060	1.52	1/4
NF050ARO*RBC	4.9998	126.995	6.5003	165.108	0.7500	19.050	5.563	141.30	5.938	150.83	6.125	155.58	0.080	2.03	3/8
NG050ARO*RBC	4.9998	126.995	7.0003	177.808	1.0000	25.400	5.750	146.05	6.250	158.75	6.500	165.10	0.080	2.03	1/2
NA055ARO*RBC	5.4998	139.695	6.0003	152.408	0.2500	6.350	5.688	144.48	5.813	147.65	5.875	149.23	0.025	0.64	1/8
NB055ARO*RBC	5.4998	139.695	6.1253	155.583	0.3125	7.938	5.734	145.64	5.891	149.63	5.969	151.61	0.032	0.81	5/32
NC055ARO*RBC	5.4998	139.695	6.2503	158.758	0.3750	9.525	5.781	146.84	5.969	151.61	6.063	154.00	0.040	1.02	3/16
ND055ARO*RBC	5.4998	139.695	6.5003	165.108	0.5000	12.700	5.875	149.23	6.125	155.58	6.250	158.75	0.060	1.52	1/4
NF055ARO*RBC	5.4998	139.695	7.0003	177.808	0.7500	19.050	6.063	154.00	6.438	163.53	6.625	168.28	0.080	2.03	3/8

*The alphanumeric identification system is used under license. Applicable nomenclature position 1: L & R series.

- 52100 Steel with Thin Dense Chrome Coating
- Large Diameter
- Light Weight
- Small Cross Section
- Circular Pocket Ball Separator

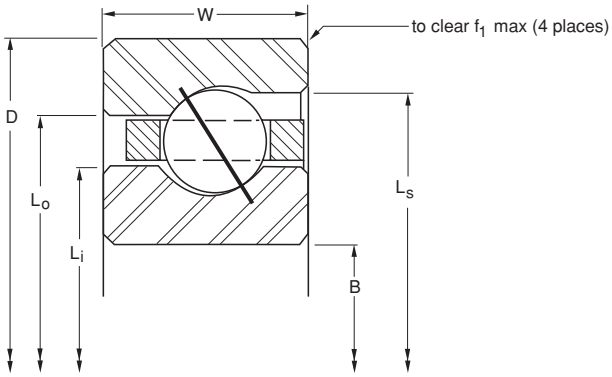

Ball Quantity	Approx. Weight lbs.	Approx. Weight kg	Radial Static lbf	Radial Static N	Radial Dynamic lbf	Radial Dynamic N	Thrust Static lbf	Thrust Static N	Thrust Dynamic lbf	Thrust Dynamic N	Moment Static lbf - in	Moment Static Nm	Moment Dynamic lbf - in	Moment Dynamic Nm	PART NUMBER*
28	0.03	0.014	340	1,510	330	1,470	970	4,310	960	4,270	N/A	N/A	N/A	N/A	NAA10AG0*RBC
40	0.04	0.018	480	2,140	380	1,690	1,380	6,140	1,100	4,890	N/A	N/A	N/A	N/A	NAA15AG0*RBC
44	0.06	0.027	530	2,360	390	1,730	1,520	6,760	1,122	4,990	N/A	N/A	N/A	N/A	NAA17AG0*RBC
36	0.10	0.045	790	3,510	600	2,670	2,280	10,140	1,730	7,700	N/A	N/A	N/A	N/A	NA020ARO*RBC
31	0.16	0.073	1,090	4,850	850	3,780	3,150	14,010	2,460	10,940	N/A	N/A	N/A	N/A	NB020ARO*RBC
44	0.13	0.059	960	4,270	640	2,850	2,780	12,370	1,860	8,270	N/A	N/A	N/A	N/A	NA025ARO*RBC
38	0.20	0.091	1,340	5,960	920	4,090	3,860	17,170	2,680	11,920	N/A	N/A	N/A	N/A	NB025ARO*RBC
52	0.15	0.068	1,140	5,070	680	3,020	3,290	14,630	1,980	8,810	N/A	N/A	N/A	N/A	NA030ARO*RBC
44	0.24	0.109	1,550	6,890	970	4,310	4,470	19,880	2,800	12,460	N/A	N/A	N/A	N/A	NB030ARO*RBC
60	0.18	0.082	1,310	5,830	720	3,200	3,790	16,860	2,070	9,210	N/A	N/A	N/A	N/A	NA035ARO*RBC
51	0.27	0.122	1,790	7,960	1,020	4,540	5,180	23,040	2,970	13,210	N/A	N/A	N/A	N/A	NB035ARO*RBC
68	0.19	0.086	1,490	6,630	750	3,340	4,300	19,130	2,180	9,700	N/A	N/A	N/A	N/A	NA040ARO*RBC
58	0.30	0.136	2,040	9,070	1,080	4,800	5,890	26,200	3,130	13,920	N/A	N/A	N/A	N/A	NB040ARO*RBC
49	0.45	0.204	2,550	11,340	1,410	6,270	7,360	32,740	4,080	18,150	N/A	N/A	N/A	N/A	NC040ARO*RBC
36	0.78	0.354	3,550	15,790	2,373	10,560	10,260	45,640	6,020	26,780	N/A	N/A	N/A	N/A	ND040ARO*RBC
26	1.90	0.862	6,350	28,250	4,350	19,350	18,340	81,580	12,620	56,140	N/A	N/A	N/A	N/A	NF040ARO*RBC
20	3.60	1.633	9,480	42,170	7,340	32,650	27,360	121,700	21,290	94,700	N/A	N/A	N/A	N/A	NG040ARO*RBC
72	0.20	0.091	1,580	7,030	770	3,430	4,550	20,240	2,240	9,960	N/A	N/A	N/A	N/A	NA042ARO*RBC
61	0.31	0.141	2,150	9,560	1,090	4,850	6,200	27,580	3,170	14,100	N/A	N/A	N/A	N/A	NB042ARO*RBC
52	0.47	0.213	2,710	12,050	1,440	6,410	7,820	34,790	4,180	18,590	N/A	N/A	N/A	N/A	NC042ARO*RBC
38	0.83	0.376	3,750	16,680	2,410	10,720	10,830	48,170	6,990	31,090	N/A	N/A	N/A	N/A	ND042ARO*RBC
27	2.00	0.907	6,600	29,360	4,390	19,530	19,050	84,740	12,740	56,670	N/A	N/A	N/A	N/A	NF042ARO*RBC
21	3.80	1.724	9,950	44,260	7,580	33,720	28,730	127,800	21,990	97,820	N/A	N/A	N/A	N/A	NG042ARO*RBC
76	0.22	0.100	1,660	7,380	780	3,470	4,810	21,400	2,260	10,050	N/A	N/A	N/A	N/A	NA045ARO*RBC
64	0.33	0.150	2,250	10,010	1,120	4,980	6,500	28,910	3,240	14,410	N/A	N/A	N/A	N/A	NB045ARO*RBC
55	0.48	0.218	2,860	12,720	1,470	6,540	8,270	36,790	4,260	18,950	N/A	N/A	N/A	N/A	NC045ARO*RBC
40	0.88	0.399	3,950	17,570	2,460	10,940	11,400	50,710	7,140	31,760	N/A	N/A	N/A	N/A	ND045ARO*RBC
29	2.10	0.953	7,090	31,540	4,550	20,240	20,460	91,010	13,200	58,720	N/A	N/A	N/A	N/A	NF045ARO*RBC
22	4.00	1.814	10,430	46,390	7,820	34,790	30,100	133,890	22,690	100,930	N/A	N/A	N/A	N/A	NG045ARO*RBC
80	0.23	0.104	1,750	7,780	800	3,560	5,060	22,510	2,310	10,280	N/A	N/A	N/A	N/A	NA047ARO*RBC
68	0.34	0.154	2,390	10,630	1,140	5,070	6,910	30,740	3,290	14,630	N/A	N/A	N/A	N/A	NB047ARO*RBC
58	0.50	0.227	3,020	13,430	1,500	6,670	8,720	38,790	4,340	19,310	N/A	N/A	N/A	N/A	NC047ARO*RBC
42	0.94	0.426	4,150	18,460	2,510	11,170	11,970	53,250	7,280	32,380	N/A	N/A	N/A	N/A	ND047ARO*RBC
30	2.20	0.998	7,330	32,610	4,610	20,510	21,160	94,120	13,380	59,520	N/A	N/A	N/A	N/A	NF047ARO*RBC
23	4.10	1.860	10,900	48,490	8,060	35,850	31,460	139,940	23,370	103,950	N/A	N/A	N/A	N/A	NG047ARO*RBC
84	0.24	0.109	1,840	8,180	810	3,600	5,310	23,620	2,360	10,500	N/A	N/A	N/A	N/A	NA050ARO*RBC
71	0.38	0.172	2,500	11,120	1,160	5,160	7,210	32,070	3,350	14,900	N/A	N/A	N/A	N/A	NB050ARO*RBC
61	0.58	0.263	3,180	14,150	1,540	6,850	9,170	40,790	4,450	19,790	N/A	N/A	N/A	N/A	NC050ARO*RBC
44	1.00	0.454	4,340	19,310	2,550	11,340	12,540	55,780	7,400	32,920	N/A	N/A	N/A	N/A	ND050ARO*RBC
31	2.30	1.043	7,570	33,670	4,650	20,680	21,870	97,280	13,480	59,960	N/A	N/A	N/A	N/A	NF050ARO*RBC
24	4.30	1.950	11,370	50,580	8,290	36,880	32,830	146,040	24,040	106,940	N/A	N/A	N/A	N/A	NG050ARO*RBC
92	0.25	0.113	2,020	8,990	830	3,690	5,820	25,890	2,410	10,720	N/A	N/A	N/A	N/A	NA055ARO*RBC
78	0.41	0.186	2,740	12,190	1,200	5,340	7,920	35,230	3,480	15,480	N/A	N/A	N/A	N/A	NB055ARO*RBC
66	0.59	0.268	3,440	15,300	1,560	6,940	9,920	44,130	4,540	20,190	N/A	N/A	N/A	N/A	NC055ARO*RBC
48	1.06	0.481	4,740	21,080	2,640	11,740	13,680	60,850	7,660	34,070	N/A	N/A	N/A	N/A	ND055ARO*RBC
34	2.50	1.134	8,310	36,960	4,820	21,440	23,980	106,670	13,980	62,190	N/A	N/A	N/A	N/A	NF055ARO*RBC

Refer to the Engineering section for load and speed limitations.

ANGULAR CONTACT, A-TYPE

THIN SECTION BALL BEARINGS

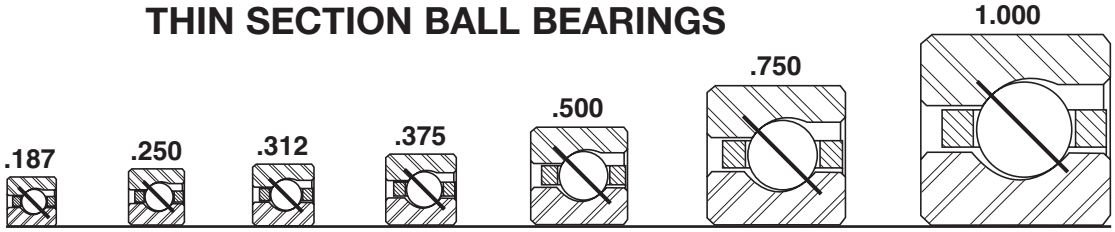

Series:	NAA	NA	NB	NC	ND	NF	NG
Cross Section Size:	3/16"	1/4"	5/16"	3/8"	1/2"	3/4"	1"

PART NUMBER*	NOMINAL DIMENSIONS															
	B Bore		D Outside Diameter		W Width		Land Diameter						f_1 Housing Fillet		Ball Diameter
							L_i -Inner Ring		L_o -Outer Ring		L_s -Counter Bore				
	in.	mm	in.	mm	in.	mm	in.	mm	in.	mm	in.	mm	in.	mm	in.
NG055ARO*RBC	5.4998	139.695	7.5003	190.508	1.0000	25.400	6.250	158.75	6.750	171.45	7.000	177.80	0.080	2.03	1/2
NA060ARO*RBC	5.9998	152.395	6.5003	165.108	0.2500	6.350	6.188	157.18	6.313	160.35	6.375	161.93	0.025	0.64	1/8
NB060ARO*RBC	5.9998	152.395	6.6253	168.283	0.3125	7.938	6.234	158.34	6.391	162.33	6.469	164.31	0.032	0.81	5/32
NC060ARO*RBC	5.9998	152.395	6.7503	171.458	0.3750	9.525	6.281	159.54	6.469	164.31	6.563	166.70	0.040	1.02	3/16
ND060ARO*RBC	5.9998	152.395	7.0003	177.808	0.5000	12.700	6.375	161.93	6.625	168.28	6.750	171.45	0.060	1.52	1/4
NF060ARO*RBC	5.9998	152.395	7.5003	190.508	0.7500	19.050	6.563	166.70	6.938	176.23	7.125	180.98	0.080	2.03	3/8
NG060ARO*RBC	5.9998	152.395	8.0003	203.208	1.0000	25.400	6.750	171.45	7.250	184.15	7.500	190.50	0.080	2.03	1/2
NA065ARO*RBC	6.4998	165.095	7.0003	177.808	0.2500	6.350	6.688	169.88	6.813	173.05	6.875	174.63	0.025	0.64	1/8
NB065ARO*RBC	6.4998	165.095	7.1253	180.983	0.3125	7.938	6.734	171.04	6.891	175.03	6.969	177.01	0.032	0.81	5/32
NC065ARO*RBC	6.4998	165.095	7.2503	184.158	0.3750	9.525	6.781	172.24	6.969	177.01	7.063	179.40	0.040	1.02	3/16
ND065ARO*RBC	6.4998	165.095	7.5003	190.508	0.5000	12.700	6.875	174.63	7.125	180.98	7.250	184.15	0.060	1.52	1/4
NF065ARO*RBC	6.4998	165.095	8.0003	203.208	0.7500	19.050	7.063	179.40	7.438	188.93	7.625	193.68	0.080	2.03	3/8
NG065ARO*RBC	6.4998	165.095	8.5003	215.908	1.0000	25.400	7.250	184.15	7.750	196.85	8.000	203.20	0.080	2.03	1/2
NA070ARO*RBC	6.9998	177.795	7.5003	190.508	0.2500	6.350	7.188	182.58	7.313	185.75	7.375	187.33	0.025	0.64	1/8
NB070ARO*RBC	6.9998	177.795	7.6253	193.683	0.3125	7.938	7.234	183.74	7.391	187.73	7.469	189.71	0.032	0.81	5/32
NC070ARO*RBC	6.9998	177.795	7.7503	196.858	0.3750	9.525	7.281	184.94	7.469	189.71	7.563	192.10	0.040	1.02	3/16
ND070ARO*RBC	6.9998	177.795	8.0003	203.208	0.5000	12.700	7.375	187.33	7.625	193.68	7.750	196.85	0.060	1.52	1/4
NF070ARO*RBC	6.9998	177.795	8.5003	215.908	0.7500	19.050	7.563	192.10	7.938	201.63	8.125	206.38	0.080	2.03	3/8
NG070ARO*RBC	6.9998	177.795	9.0003	228.608	1.0000	25.400	7.750	196.85	8.250	209.55	8.500	215.90	0.080	2.03	1/2
NA075ARO*RBC	7.4998	190.495	8.0003	203.208	0.2500	6.350	7.688	195.28	7.813	198.45	7.875	200.03	0.025	0.64	1/8
NB075ARO*RBC	7.4998	190.495	8.1253	206.383	0.3125	7.938	7.734	196.44	7.891	200.43	7.969	202.41	0.032	0.81	5/32
NC075ARO*RBC	7.4998	190.495	8.2503	209.558	0.3750	9.525	7.781	197.64	7.969	202.41	8.063	204.80	0.040	1.02	3/16
ND075ARO*RBC	7.4998	190.495	8.5003	215.908	0.5000	12.700	7.875	200.03	8.125	206.38	8.250	209.55	0.060	1.52	1/4
NF075ARO*RBC	7.4998	190.495	9.0003	228.608	0.7500	19.050	8.063	204.80	8.438	214.33	8.625	219.08	0.080	2.03	3/8
NG075ARO*RBC	7.4998	190.495	9.5003	241.308	1.0000	25.400	8.250	209.55	8.750	222.25	9.000	228.60	0.080	2.03	1/2
NA080ARO*RBC	7.9998	203.195	8.5003	215.908	0.2500	6.350	8.188	207.98	8.313	211.15	8.375	212.73	0.025	0.64	1/8
NB080ARO*RBC	7.9998	203.195	8.6253	219.083	0.3125	7.938	8.234	209.14	8.391	213.13	8.469	215.11	0.032	0.81	5/32
NC080ARO*RBC	7.9998	203.195	8.7503	222.258	0.3750	9.525	8.281	210.34	8.469	215.11	8.563	217.50	0.040	1.02	3/16
ND080ARO*RBC	7.9998	203.195	9.0003	228.608	0.5000	12.700	8.375	212.73	8.625	219.08	8.750	222.25	0.060	1.52	1/4
NF080ARO*RBC	7.9998	203.195	9.5003	241.308	0.7500	19.050	8.563	217.50	8.938	227.03	9.125	231.78	0.080	2.03	3/8
NG080ARO*RBC	7.9998	203.195	10.0003	254.008	1.0000	25.400	8.750	222.25	9.250	234.95	9.500	241.30	0.080	2.03	1/2
NA090ARO*RBC	8.9998	228.595	9.5003	241.308	0.2500	6.350	9.188	233.38	9.313	236.55	9.375	238.13	0.025	0.64	1/8
NB090ARO*RBC	8.9998	228.595	9.6253	244.483	0.3125	7.938	9.234	234.54	9.391	238.53	9.469	240.51	0.032	0.81	5/32
NC090ARO*RBC	8.9998	228.595	9.7503	247.658	0.3750	9.525	9.281	235.74	9.469	240.51	9.563	242.90	0.040	1.02	3/16
ND090ARO*RBC	8.9998	228.595	10.0003	254.008	0.5000	12.700	9.375	238.13	9.625	244.48	9.750	247.65	0.060	1.52	1/4
NF090ARO*RBC	8.9998	228.595	10.5003	266.708	0.7500	19.050	9.563	242.90	9.938	252.43	10.125	257.18	0.080	2.03	3/8
NG090ARO*RBC	8.9998	228.595	11.0003	279.408	1.0000	25.400	9.750	247.65	10.250	260.35	10.500	266.70	0.080	2.03	1/2
NA100ARO*RBC	9.9998	253.995	10.5003	266.708	0.2500	6.350	10.188	258.78	10.313	261.95	10.375	263.53	0.025	0.64	1/8
NB100ARO*RBC	9.9998	253.995	10.6253	269.883	0.3125	7.938	10.234	259.94	10.391	263.93	10.469	265.91	0.032	0.81	5/32
NC100ARO*RBC	9.9998	253.995	10.7503	273.058	0.3750	9.525	10.281	261.14	10.469	265.91	10.563	268.30	0.040	1.02	3/16
ND100ARO*RBC	9.9998	253.995	11.0003	279.408	0.5000	12.700	10.375	263.53	10.625	269.88	10.750	273.05	0.060	1.52	1/4
NF100ARO*RBC	9.9998	253.995	11.5003	292.108	0.7500	19.050	10.563	268.30	10.938	277.83	11.125	282.58	0.080	2.03	3/8
NG100ARO*RBC	9.9998	253.995	12.0003	304.808	1.0000	25.400	10.750	273.05	11.250	285.75	11.500	292.10	0.080	2.03	1/2

*The alphanumeric identification system is used under license. Applicable nomenclature position 1: L & R series.

- 52100 Steel with Thin Dense Chrome Coating
- Large Diameter
- Light Weight
- Small Cross Section
- Circular Pocket Ball Separator

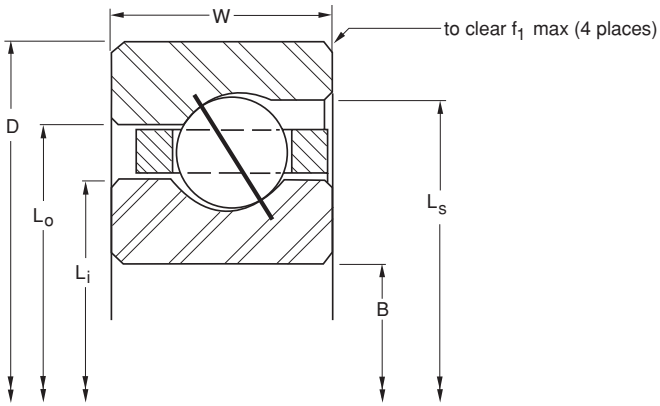

Ball Quantity	Approx. Weight		LOAD RATINGS												PART NUMBER*
			Radial				Thrust				Moment				
			Static		Dynamic		Static		Dynamic		Static		Dynamic		
	lbs.	kg	lbf	N	lbf	N	lbf	N	lbf	N	lbf - in	Nm	lbf - in	Nm	
26	4.70	2.132	12,320	54,800	8,610	38,300	35,570	158,220	24,960	111,030	N/A	N/A	N/A	N/A	NG055ARO*RBC
100	0.28	0.127	2,190	9,740	860	3,830	6,320	28,110	2,500	11,120	N/A	N/A	N/A	N/A	NA060ARO*RBC
85	0.44	0.200	2,990	13,300	1,240	5,520	8,630	38,390	3,600	16,010	N/A	N/A	N/A	N/A	NB060ARO*RBC
72	0.63	0.286	3,750	16,680	1,620	7,210	10,820	48,130	4,690	20,860	N/A	N/A	N/A	N/A	NC060ARO*RBC
52	1.16	0.526	5,130	22,820	2,720	12,100	14,820	65,920	7,880	35,050	N/A	N/A	N/A	N/A	ND060ARO*RBC
37	2.70	1.225	9,040	40,210	5,010	22,290	26,100	116,100	14,530	64,630	N/A	N/A	N/A	N/A	NF060ARO*RBC
28	5.10	2.313	13,270	59,030	8,860	39,410	38,300	170,370	25,700	114,320	N/A	N/A	N/A	N/A	NG060ARO*RBC
108	0.30	0.136	2,370	10,540	890	3,960	6,830	30,380	2,580	11,480	N/A	N/A	N/A	N/A	NA065ARO*RBC
91	0.47	0.213	3,200	14,230	1,260	5,600	9,240	41,100	3,650	16,240	N/A	N/A	N/A	N/A	NB065ARO*RBC
78	0.68	0.308	4,060	18,060	1,670	7,430	11,720	52,130	4,830	21,480	N/A	N/A	N/A	N/A	NC065ARO*RBC
56	1.22	0.553	5,530	24,600	2,780	12,370	15,960	70,990	8,070	35,900	N/A	N/A	N/A	N/A	ND065ARO*RBC
40	2.90	1.315	9,770	43,460	5,140	22,860	28,220	125,530	14,920	66,370	N/A	N/A	N/A	N/A	NF065ARO*RBC
30	5.40	2.449	14,220	63,250	9,110	40,520	41,040	182,560	26,410	117,480	N/A	N/A	N/A	N/A	NG065ARO*RBC
116	0.31	0.141	2,540	11,300	900	4,000	7,340	32,650	2,600	11,570	N/A	N/A	N/A	N/A	NA070ARO*RBC
98	0.50	0.227	3,450	15,350	1,300	5,780	9,960	44,300	3,760	16,730	N/A	N/A	N/A	N/A	NB070ARO*RBC
83	0.73	0.331	4,320	19,220	1,720	7,650	12,470	55,470	4,980	22,150	N/A	N/A	N/A	N/A	NC070ARO*RBC
60	1.31	0.594	5,920	26,330	2,850	12,680	17,100	76,060	8,260	36,740	N/A	N/A	N/A	N/A	ND070ARO*RBC
43	3.20	1.451	10,510	46,750	5,290	23,530	30,330	134,910	15,350	68,280	N/A	N/A	N/A	N/A	NF070ARO*RBC
32	5.80	2.631	15,160	67,440	9,370	41,680	43,780	194,740	27,160	120,810	N/A	N/A	N/A	N/A	NG070ARO*RBC
124	0.34	0.154	2,720	12,100	920	4,090	7,840	34,870	2,660	11,830	N/A	N/A	N/A	N/A	NA075ARO*RBC
105	0.53	0.240	3,700	16,460	1,330	5,920	10,670	47,460	3,860	17,170	N/A	N/A	N/A	N/A	NB075ARO*RBC
89	0.78	0.354	4,630	20,600	1,750	7,780	13,380	59,520	5,090	22,640	N/A	N/A	N/A	N/A	NC075ARO*RBC
64	1.41	0.640	6,320	28,110	2,940	13,080	18,240	81,140	8,520	37,900	N/A	N/A	N/A	N/A	ND075ARO*RBC
45	3.40	1.542	11,000	48,930	5,380	23,930	31,740	141,190	15,590	69,350	N/A	N/A	N/A	N/A	NF075ARO*RBC
34	6.10	2.767	16,110	71,660	9,560	42,530	46,510	206,890	27,710	123,260	N/A	N/A	N/A	N/A	NG075ARO*RBC
132	0.38	0.172	2,890	12,860	960	4,270	8,350	37,140	2,770	12,320	N/A	N/A	N/A	N/A	NA080ARO*RBC
112	0.57	0.259	3,940	17,530	1,360	6,050	11,380	50,620	3,950	17,570	N/A	N/A	N/A	N/A	NB080ARO*RBC
95	0.84	0.381	4,950	22,020	1,800	8,010	14,280	63,520	5,210	23,180	N/A	N/A	N/A	N/A	NC080ARO*RBC
68	1.53	0.694	6,710	29,850	2,990	13,300	19,380	86,210	8,670	38,570	N/A	N/A	N/A	N/A	ND080ARO*RBC
48	3.50	1.588	11,730	52,180	5,520	24,550	33,860	150,620	16,020	71,260	N/A	N/A	N/A	N/A	NF080ARO*RBC
36	6.50	2.948	17,060	75,890	9,800	43,590	49,250	219,070	28,430	126,460	N/A	N/A	N/A	N/A	NG080ARO*RBC
148	0.44	0.200	3,240	14,410	990	4,400	9,360	41,640	2,860	12,720	N/A	N/A	N/A	N/A	NA090ARO*RBC
125	0.66	0.299	4,400	19,570	1,410	6,270	12,700	56,490	4,080	18,150	N/A	N/A	N/A	N/A	NB090ARO*RBC
106	0.94	0.426	5,520	24,550	1,860	8,270	15,930	70,860	5,400	24,020	N/A	N/A	N/A	N/A	NC090ARO*RBC
76	1.72	0.780	7,500	33,360	3,100	13,790	21,660	96,350	9,000	40,030	N/A	N/A	N/A	N/A	ND090ARO*RBC
54	3.90	1.769	13,190	58,670	5,780	25,710	38,090	169,430	16,760	74,550	N/A	N/A	N/A	N/A	NF090ARO*RBC
40	7.20	3.266	18,960	84,340	10,190	45,330	54,720	243,410	29,540	131,400	N/A	N/A	N/A	N/A	NG090ARO*RBC
164	0.50	0.227	3,590	15,970	1,030	4,580	10,370	46,130	3,000	13,340	N/A	N/A	N/A	N/A	NA100ARO*RBC
139	0.73	0.331	4,890	21,750	1,480	6,580	14,120	62,810	4,290	19,080	N/A	N/A	N/A	N/A	NB100ARO*RBC
118	1.06	0.481	6,140	27,310	1,942	8,640	17,730	78,870	5,570	24,780	N/A	N/A	N/A	N/A	NC100ARO*RBC
84	1.88	0.853	8,290	36,880	3,240	14,410	23,940	106,490	9,390	41,770	N/A	N/A	N/A	N/A	ND100ARO*RBC
59	4.30	1.950	14,420	64,140	5,980	26,600	41,620	185,130	17,330	77,090	N/A	N/A	N/A	N/A	NF100ARO*RBC
44	7.90	3.583	20,850	92,750	10,560	46,970	60,190	267,740	30,620	136,200	N/A	N/A	N/A	N/A	NG100ARO*RBC

Refer to the Engineering section for load and speed limitations.

ANGULAR CONTACT, A-TYPE

THIN SECTION BALL BEARINGS

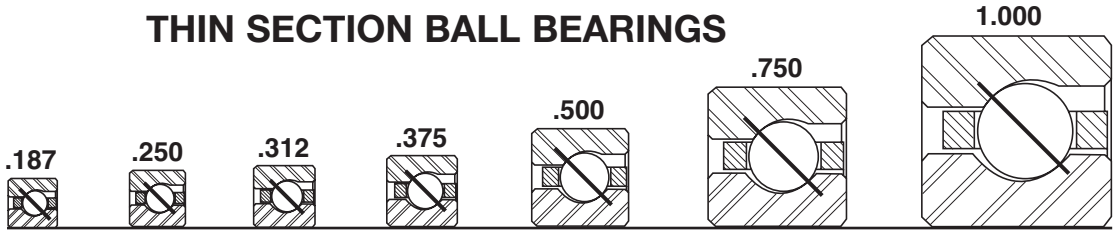

Series:	NAA	NA	NB	NC	ND	NF	NG
Cross Section Size:	3/16"	1/4"	5/16"	3/8"	1/2"	3/4"	1"

PART NUMBER*	NOMINAL DIMENSIONS														
	B Bore		D Outside Diameter		W Width		Land Diameter						f1 Housing Fillet		Ball Diameter
							L_i -Inner Ring		L_o -Outer Ring		L_s -Counter Bore				
	in.	mm	in.	mm	in.	mm	in.	mm	in.	mm	in.	mm	in.	mm	in.
NA110ARO*RBC	10.9998	279.395	11.5003	292.108	0.2500	6.350	11.188	284.18	11.313	287.35	11.375	288.93	0.025	0.64	1/8
NB110ARO*RBC	10.9998	279.395	11.6253	295.283	0.3125	7.938	11.234	285.34	11.391	289.33	11.469	291.31	0.032	0.81	5/32
NC110ARO*RBC	10.9998	279.395	11.7503	298.458	0.3750	9.525	11.281	286.54	11.469	291.31	11.563	293.70	0.040	1.02	3/16
ND110ARO*RBC	10.9998	279.395	12.0003	304.808	0.5000	12.700	11.375	288.93	11.625	295.28	11.750	298.45	0.060	1.52	1/4
NF110ARO*RBC	10.9998	279.395	12.5003	317.508	0.7500	19.050	11.563	293.70	11.938	303.23	12.125	307.98	0.080	2.03	3/8
NG110ARO*RBC	10.9998	279.395	13.0003	330.208	1.0000	25.400	11.750	298.45	12.250	311.15	12.500	317.50	0.080	2.03	1/2
NA120ARO*RBC	11.9998	304.795	12.5003	317.508	0.2500	6.350	12.188	309.58	12.313	312.75	12.375	314.33	0.025	0.64	1/8
NB120ARO*RBC	11.9998	304.795	12.6253	320.683	0.3125	7.938	12.234	310.74	12.391	314.73	12.469	316.71	0.032	0.81	5/32
NC120ARO*RBC	11.9998	304.795	12.7503	323.858	0.3750	9.525	12.281	311.94	12.469	316.71	12.563	319.10	0.040	1.02	3/16
ND120ARO*RBC	11.9998	304.795	13.0003	330.208	0.5000	12.700	12.375	314.33	12.625	320.68	12.750	323.85	0.060	1.52	1/4
NF120ARO*RBC	11.9998	304.795	13.5003	342.908	0.7500	19.050	12.563	319.10	12.938	328.63	13.125	333.38	0.080	2.03	3/8
NG120ARO*RBC	11.9998	304.795	14.0003	355.608	1.0000	25.400	12.750	323.85	13.250	336.55	13.500	342.90	0.080	2.03	1/2
NB140ARO*RBC	13.9998	355.595	14.6253	371.483	0.3125	7.938	14.234	361.54	14.391	365.53	14.469	367.51	0.032	0.81	5/32
NC140ARO*RBC	13.9998	355.595	14.7503	374.658	0.3750	9.525	14.281	362.74	14.469	367.51	14.563	369.90	0.040	1.02	3/16
ND140ARO*RBC	13.9998	355.595	15.0003	381.008	0.5000	12.700	14.375	365.13	14.625	371.48	14.750	374.65	0.060	1.52	1/4
NF140ARO*RBC	13.9998	355.595	15.5003	393.708	0.7500	19.050	14.563	369.90	14.938	379.43	15.125	384.18	0.080	2.03	3/8
NG140ARO*RBC	13.9998	355.595	16.0003	406.408	1.0000	25.400	14.750	374.65	15.250	387.35	15.500	393.70	0.080	2.03	1/2
NB160ARO*RBC	15.9998	406.395	16.6253	422.283	0.3125	7.938	16.234	412.34	16.391	416.33	16.469	418.31	0.032	0.81	5/32
NC160ARO*RBC	15.9998	406.395	16.7503	425.458	0.3750	9.525	16.281	413.54	16.469	418.31	16.563	420.70	0.040	1.02	3/16
ND160ARO*RBC	15.9998	406.395	17.0003	431.808	0.5000	12.700	16.375	415.93	16.625	422.28	16.750	425.45	0.060	1.52	1/4
NF160ARO*RBC	15.9998	406.395	17.5003	444.508	0.7500	19.050	16.563	420.70	16.938	430.23	17.125	434.98	0.080	2.03	3/8
NG160ARO*RBC	15.9998	406.395	18.0003	457.208	1.0000	25.400	16.750	425.45	17.250	438.15	17.500	444.50	0.080	2.03	1/2
NB180ARO*RBC	17.9998	457.195	18.6253	473.083	0.3125	7.938	18.234	463.14	18.391	467.13	18.469	469.11	0.032	0.81	5/32
NC180ARO*RBC	17.9998	457.195	18.7503	476.258	0.3750	9.525	18.281	464.34	18.469	469.11	18.563	471.50	0.040	1.02	3/16
ND180ARO*RBC	17.9998	457.195	19.0003	482.608	0.5000	12.700	18.375	466.73	18.625	473.08	18.750	476.25	0.060	1.52	1/4
NF180ARO*RBC	17.9998	457.195	19.5003	495.308	0.7500	19.050	18.563	471.50	18.938	481.03	19.125	485.78	0.080	2.03	3/8
NG180ARO*RBC	17.9998	457.195	20.0003	508.008	1.0000	25.400	18.750	476.25	19.250	488.95	19.500	495.30	0.080	2.03	1/2
NB200ARO*RBC	19.9998	507.995	20.6253	523.883	0.3125	7.938	20.234	513.94	20.391	517.93	20.469	519.91	0.032	0.81	5/32
NC200ARO*RBC	19.9998	507.995	20.7503	527.058	0.3750	9.525	20.281	515.14	20.469	519.91	20.563	522.30	0.040	1.02	3/16
ND200ARO*RBC	19.9998	507.995	21.0003	533.408	0.5000	12.700	20.375	517.53	20.625	523.88	20.750	527.05	0.060	1.52	1/4
NF200ARO*RBC	19.9998	507.995	21.5003	546.108	0.7500	19.050	20.563	522.30	20.938	531.83	21.125	536.58	0.080	2.03	3/8
NG200ARO*RBC	19.9998	507.995	22.0003	558.808	1.0000	25.400	20.750	527.05	21.250	539.75	21.500	546.10	0.080	2.03	1/2
NC250ARO*RBC	24.9998	634.995	25.7503	654.058	0.3750	9.525	25.281	642.14	25.469	646.91	25.563	649.30	0.040	1.02	3/16
ND250ARO*RBC	24.9998	634.995	26.0003	660.408	0.5000	12.700	25.375	644.53	25.625	650.88	25.750	654.05	0.060	1.52	1/4
NF250ARO*RBC	24.9998	634.995	26.5003	673.108	0.7500	19.050	25.563	649.30	25.938	658.83	26.125	663.58	0.080	2.03	3/8
NG250ARO*RBC	24.9998	634.995	27.0003	685.808	1.0000	25.400	25.750	654.05	26.250	666.75	26.500	673.10	0.080	2.03	1/2
NC300ARO*RBC	29.9998	761.995	30.7503	781.058	0.3750	9.525	30.281	769.14	30.469	773.91	30.563	776.30	0.040	1.02	3/16
ND300ARO*RBC	29.9998	761.995	31.0003	787.408	0.5000	12.700	30.375	771.53	30.625	777.88	30.750	781.05	0.060	1.52	1/4
NF300ARO*RBC	29.9998	761.995	31.5003	800.108	0.7500	19.050	30.563	776.30	30.938	785.83	31.125	790.58	0.080	2.03	3/8
NG300ARO*RBC	29.9998	761.995	32.0003	812.808	1.0000	25.400	30.750	781.05	31.250	793.75	31.500	800.10	0.080	2.03	1/2
NF350ARO*RBC	34.9998	888.995	36.5003	927.108	0.7500	19.050	35.563	903.30	35.938	912.83	36.125	917.58	0.080	2.03	3/8
NG350ARO*RBC	34.9998	888.995	37.0003	939.808	1.0000	25.400	35.750	908.05	36.250	920.75	36.500	927.10	0.080	2.03	1/2
NF400ARO*RBC	39.9998	1015.995	41.5003	1054.108	0.7500	19.050	40.563	1030.30	40.938	1039.83	41.125	1044.58	0.080	2.03	3/8
NG400ARO*RBC	39.9998	1015.995	42.0003	1066.808	1.0000	25.400	40.750	1035.05	41.250	1047.75	41.500	1054.10	0.080	2.03	1/2

*The alphanumeric identification system is used under license. Applicable nomenclature position 1: L & R series.

- 52100 Steel with Thin Dense Chrome Coating
- Large Diameter
- Light Weight
- Small Cross Section
- Circular Pocket Ball Separator

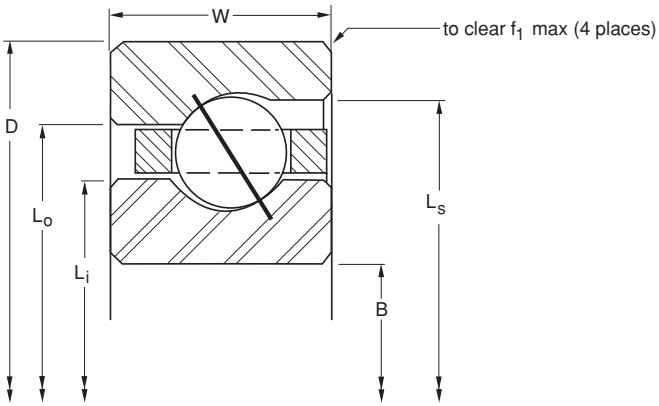

Ball Quantity	Approx. Weight lbs.	Approx. Weight kg	Radial Static lbf	Radial Static N	Radial Dynamic lbf	Radial Dynamic N	Thrust Static lbf	Thrust Static N	Thrust Dynamic lbf	Thrust Dynamic N	Moment Static lbf - in	Moment Static Nm	Moment Dynamic lbf - in	Moment Dynamic Nm	PART NUMBER*
180	0.52	0.236	3,940	17,530	1,072	4,770	11,380	50,620	3,100	13,790	N/A	N/A	N/A	N/A	NA110ARO*RBC
152	0.75	0.340	5,350	23,800	1,540	6,850	15,440	68,680	4,350	19,350	N/A	N/A	N/A	N/A	NB110ARO*RBC
129	1.16	0.526	6,720	29,890	2,047	9,110	19,390	86,250	5,780	25,710	N/A	N/A	N/A	N/A	NC110ARO*RBC
92	2.06	0.934	9,080	40,390	3,310	14,720	26,220	116,630	9,600	42,700	N/A	N/A	N/A	N/A	ND110ARO*RBC
65	4.80	2.177	15,880	70,640	6,227	27,700	45,850	203,950	17,870	79,490	N/A	N/A	N/A	N/A	NF110ARO*RBC
48	8.60	3.901	22,750	101,200	10,920	48,570	65,660	292,070	31,660	140,830	N/A	N/A	N/A	N/A	NG110ARO*RBC
196	0.56	0.254	4,290	19,080	1,128	5,020	12,390	55,110	3,200	14,230	N/A	N/A	N/A	N/A	NA120ARO*RBC
166	0.83	0.376	5,840	25,980	1,623	7,220	16,860	75,000	4,510	20,060	N/A	N/A	N/A	N/A	NB120ARO*RBC
140	1.25	0.567	7,290	32,430	2,147	9,550	21,040	93,590	5,980	26,600	N/A	N/A	N/A	N/A	NC120ARO*RBC
100	2.25	1.021	9,870	43,900	3,430	15,260	28,500	126,770	9,950	44,260	N/A	N/A	N/A	N/A	ND120ARO*RBC
70	5.20	2.359	17,100	76,060	6,487	28,860	49,380	219,650	18,340	81,580	N/A	N/A	N/A	N/A	NF120ARO*RBC
52	9.30	4.218	24,640	109,600	11,230	49,950	71,140	316,450	32,570	144,880	N/A	N/A	N/A	N/A	NG120ARO*RBC
192	1.05	0.476	6,760	30,070	1,767	7,860	19,500	86,740	4,840	21,530	N/A	N/A	N/A	N/A	NB140ARO*RBC
163	1.52	0.689	8,490	37,770	2,347	10,440	24,500	108,980	6,330	28,160	N/A	N/A	N/A	N/A	NC140ARO*RBC
116	2.73	1.238	11,450	50,930	3,582	15,930	33,060	147,060	10,340	45,990	N/A	N/A	N/A	N/A	ND140ARO*RBC
81	6.00	2.722	19,790	88,030	7,043	31,330	57,140	254,170	19,490	86,700	N/A	N/A	N/A	N/A	NF140ARO*RBC
60	10.80	4.899	28,430	126,460	11,770	52,360	82,080	365,110	34,150	151,910	N/A	N/A	N/A	N/A	NG140ARO*RBC
219	1.20	0.544	7,710	34,300	1,907	8,480	22,250	98,970	5,150	22,910	N/A	N/A	N/A	N/A	NB160ARO*RBC
186	1.73	0.785	9,680	43,060	2,533	11,270	27,950	124,330	6,730	29,940	N/A	N/A	N/A	N/A	NC160ARO*RBC
132	3.10	1.406	13,030	57,960	3,856	17,150	37,620	167,340	11,030	49,060	N/A	N/A	N/A	N/A	ND160ARO*RBC
92	7.10	3.221	22,480	100,000	7,563	33,640	64,890	288,650	20,310	90,340	N/A	N/A	N/A	N/A	NF160ARO*RBC
68	12.30	5.579	32,220	143,320	12,360	54,980	93,020	413,770	35,850	159,470	N/A	N/A	N/A	N/A	NG160ARO*RBC
246	1.35	0.612	8,660	38,520	2,038	9,070	24,990	111,160	5,510	24,510	N/A	N/A	N/A	N/A	NB180ARO*RBC
209	1.94	0.880	10,880	48,400	2,707	12,040	31,410	139,720	7,280	32,380	N/A	N/A	N/A	N/A	NC180ARO*RBC
148	3.48	1.579	14,610	64,990	4,113	18,300	42,180	187,630	11,390	50,670	N/A	N/A	N/A	N/A	ND180ARO*RBC
104	7.90	3.583	25,410	113,030	8,103	36,040	73,360	326,320	21,210	94,350	N/A	N/A	N/A	N/A	NF180ARO*RBC
76	13.70	6.214	36,020	160,220	12,898	57,370	104,000	462,620	37,230	165,610	N/A	N/A	N/A	N/A	NG180ARO*RBC
273	1.50	0.680	9,610	42,750	2,162	9,620	27,730	123,350	5,900	26,240	N/A	N/A	N/A	N/A	NB200ARO*RBC
231	2.16	0.980	12,030	53,510	2,863	12,740	34,720	154,440	7,780	34,610	N/A	N/A	N/A	N/A	NC200ARO*RBC
164	3.85	1.746	16,190	72,020	4,356	19,380	46,740	207,910	11,920	53,020	N/A	N/A	N/A	N/A	ND200ARO*RBC
115	8.90	4.037	28,100	125,000	8,562	38,090	81,120	360,840	22,680	100,890	N/A	N/A	N/A	N/A	NF200ARO*RBC
84	15.80	7.167	39,810	177,080	13,612	60,550	114,900	511,100	38,830	172,720	N/A	N/A	N/A	N/A	NG200ARO*RBC
288	2.69	1.220	14,900	66,280	3,233	14,380	43,280	192,520	9,010	40,080	N/A	N/A	N/A	N/A	NC250ARO*RBC
204	4.79	2.173	20,140	89,590	4,908	21,830	58,140	258,620	13,540	60,230	N/A	N/A	N/A	N/A	ND250ARO*RBC
142	10.90	4.944	34,700	154,350	9,585	42,640	100,200	445,710	26,100	116,100	N/A	N/A	N/A	N/A	NF250ARO*RBC
104	19.50	8.845	49,280	219,210	15,239	67,790	142,300	632,980	41,420	184,250	N/A	N/A	N/A	N/A	NG250ARO*RBC
345	3.21	1.456	17,960	79,890	3,561	15,840	51,850	230,640	10,160	45,190	N/A	N/A	N/A	N/A	NC300ARO*RBC
244	5.73	2.599	24,090	107,160	5,397	24,010	69,540	309,330	15,260	67,880	N/A	N/A	N/A	N/A	ND300ARO*RBC
170	13.00	5.897	41,540	184,780	10,533	46,850	119,900	533,340	29,430	130,910	N/A	N/A	N/A	N/A	NF300ARO*RBC
124	23.30	10.569	58,760	261,380	16,687	74,230	169,600	754,420	46,020	204,710	N/A	N/A	N/A	N/A	NG300ARO*RBC
198	15.10	6.849	48,380	215,200	11,382	50,630	139,700	621,420	32,580	144,920	N/A	N/A	N/A	N/A	NF350ARO*RBC
144	27.10	12.292	68,240	303,550	17,982	79,990	197,000	876,300	50,840	226,150	N/A	N/A	N/A	N/A	NG350ARO*RBC
226	17.20	7.802	55,220	245,630	12,147	54,030	159,400	709,050	35,580	158,270	N/A	N/A	N/A	N/A	NF400ARO*RBC
164	30.80	13.971	77,720	345,720	19,153	85,200	224,400	998,180	55,440	246,610	N/A	N/A	N/A	N/A	NG400ARO*RBC

Refer to the Engineering section for load and speed limitations.

4-POINT CONTACT, X-TYPE

THIN SECTION BALL BEARINGS

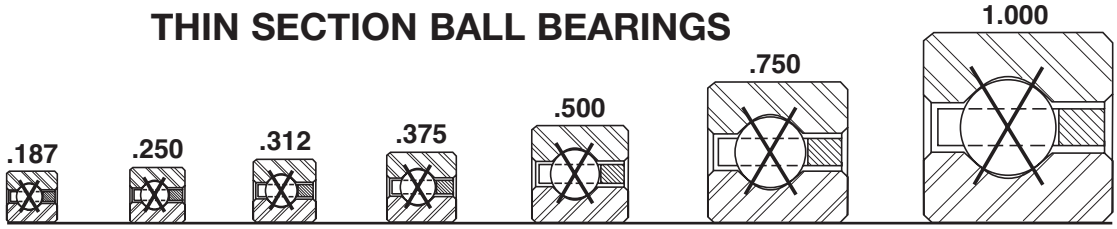

Series:	NAA	NA	NB	NC	ND	NF	NG
Cross Section Size:	3/16"	1/4"	5/16"	3/8"	1/2"	3/4"	1"

PART NUMBER*	NOMINAL DIMENSIONS												
	B Bore		D Outside Diameter		W Width		Land Diameter L_i -Inner Ring		Land Diameter L_o -Outer Ring		f_1 Housing Fillet		Ball Diameter
	in.	mm	in.	mm	in.	mm	in.	mm	in.	mm	in.	mm	in.
NAA10XLO*RBC	1.0000	25.400	1.3752	34.930	0.1875	4.763	1.141	28.98	1.234	31.34	0.015	0.38	3/32
NAA15XLO*RBC	1.5000	38.100	1.8752	47.630	0.1875	4.763	1.641	41.68	1.734	44.04	0.015	0.38	3/32
NAA17XLO*RBC	1.7500	44.450	2.1252	53.980	0.1875	4.763	1.890	48.01	1.985	50.42	0.015	0.38	3/32
NA020XPO*RBC	2.0000	50.800	2.5002	63.505	0.2500	6.350	2.188	55.58	2.313	58.75	0.025	0.64	1/8
NB020XPO*RBC	2.0000	50.800	2.6252	66.680	0.3125	7.938	2.234	56.74	2.391	60.73	0.032	0.81	5/32
NA025XPO*RBC	2.5000	63.500	3.0002	76.205	0.2500	6.350	2.688	68.28	2.813	71.45	0.025	0.64	1/8
NB025XPO*RBC	2.5000	63.500	3.1252	79.380	0.3125	7.938	2.734	69.44	2.891	73.43	0.040	1.02	5/32
NA030XPO*RBC	3.0000	76.200	3.5002	88.905	0.2500	6.350	3.188	80.98	3.313	84.15	0.025	0.64	1/8
NB030XPO*RBC	3.0000	76.200	3.6252	92.080	0.3125	7.938	3.234	82.14	3.391	86.13	0.032	0.81	5/32
NA035XPO*RBC	3.5000	88.900	4.0002	101.605	0.2500	6.350	3.688	93.68	3.813	96.85	0.025	0.64	1/8
NB035XPO*RBC	3.5000	88.900	4.1252	104.780	0.3125	7.938	3.734	94.84	3.891	98.83	0.032	0.81	5/32
NA040XPO*RBC	3.9998	101.595	4.5003	114.308	0.2500	6.350	4.188	106.38	4.313	109.55	0.025	0.64	1/8
NB040XPO*RBC	3.9998	101.595	4.6253	117.483	0.3125	7.938	4.234	107.54	4.391	111.53	0.032	0.81	5/32
NC040XPO*RBC	3.9998	101.595	4.7503	120.658	0.3750	9.525	4.281	108.74	4.469	113.51	0.040	1.02	3/16
ND040XPO*RBC	3.9998	101.595	5.0003	127.008	0.5000	12.700	4.375	111.13	4.625	117.48	0.060	1.52	1/4
NF040XPO*RBC	3.9998	101.595	5.5003	139.708	0.7500	19.050	4.563	115.90	4.938	125.43	0.080	2.03	3/8
NG040XPO*RBC	3.9998	101.595	6.0003	152.408	1.0000	25.400	4.750	120.65	5.250	133.35	0.080	2.03	1/2
NA042XPO*RBC	4.2498	107.945	4.7503	120.658	0.2500	6.350	4.438	112.73	4.563	115.90	0.025	0.64	1/8
NB042XPO*RBC	4.2498	107.945	4.8753	123.833	0.3125	7.938	4.484	113.89	4.641	117.88	0.032	0.81	5/32
NC042XPO*RBC	4.2498	107.945	5.0003	127.008	0.3750	9.525	4.531	115.09	4.719	119.86	0.040	1.02	3/16
ND042XPO*RBC	4.2498	107.945	5.2503	133.358	0.5000	12.700	4.625	117.48	4.875	123.83	0.060	1.52	1/4
NF042XPO*RBC	4.2498	107.945	5.7503	146.058	0.7500	19.050	4.813	122.25	5.188	131.78	0.080	2.03	3/8
NG042XPO*RBC	4.2498	107.945	6.2503	158.758	1.0000	25.400	5.000	127.00	5.500	139.70	0.080	2.03	1/2
NA045XPO*RBC	4.4998	114.295	5.0003	127.008	0.2500	6.350	4.688	119.08	4.813	122.25	0.025	0.64	1/8
NB045XPO*RBC	4.4998	114.295	5.1253	130.183	0.3125	7.938	4.734	120.24	4.891	124.23	0.032	0.81	5/32
NC045XPO*RBC	4.4998	114.295	5.2503	133.358	0.3750	9.525	4.781	121.44	4.969	126.21	0.040	1.02	3/16
ND045XPO*RBC	4.4998	114.295	5.5003	139.708	0.5000	12.700	4.875	123.83	5.125	130.18	0.060	1.52	1/4
NF045XPO*RBC	4.4998	114.295	6.0003	152.408	0.7500	19.050	5.063	128.60	5.438	138.13	0.080	2.03	3/8
NG045XPO*RBC	4.4998	114.295	6.5003	165.108	1.0000	25.400	5.250	133.35	5.750	146.05	0.080	2.03	1/2
NA047XPO*RBC	4.7498	120.645	5.2503	133.358	0.2500	6.350	4.938	125.43	5.063	128.60	0.025	0.64	1/8
NB047XPO*RBC	4.7498	120.645	5.3753	136.533	0.3125	7.938	4.984	126.59	5.141	130.58	0.032	0.81	5/32
NC047XPO*RBC	4.7498	120.645	5.5003	139.708	0.3750	9.525	5.031	127.79	5.219	132.56	0.040	1.02	3/16
ND047XPO*RBC	4.7498	120.645	5.7503	146.058	0.5000	12.700	5.125	130.18	5.375	136.53	0.060	1.52	1/4
NF047XPO*RBC	4.7498	120.645	6.2503	158.758	0.7500	19.050	5.313	134.95	5.688	144.48	0.080	2.03	3/8
NG047XPO*RBC	4.7498	120.645	6.7503	171.458	1.0000	25.400	5.500	139.70	6.000	152.40	0.080	2.03	1/2
NA050XPO*RBC	4.9998	126.995	5.5003	139.708	0.2500	6.350	5.188	131.78	5.313	134.95	0.025	0.64	1/8
NB050XPO*RBC	4.9998	126.995	5.6253	142.883	0.3125	7.938	5.234	132.94	5.391	136.93	0.032	0.81	5/32
NC050XPO*RBC	4.9998	126.995	5.7503	146.058	0.3750	9.525	5.281	134.14	5.469	138.91	0.040	1.02	3/16
ND050XPO*RBC	4.9998	126.995	6.0003	152.408	0.5000	12.700	5.375	136.53	5.625	142.88	0.060	1.52	1/4
NF050XPO*RBC	4.9998	126.995	6.5003	165.108	0.7500	19.050	5.563	141.30	5.938	150.83	0.080	2.03	3/8
NG050XPO*RBC	4.9998	126.995	7.0003	177.808	1.0000	25.400	5.750	146.05	6.250	158.75	0.080	2.03	1/2
NA055XPO*RBC	5.4998	139.695	6.0003	152.408	0.2500	6.350	5.688	144.48	5.813	147.65	0.025	0.64	1/8
NB055XPO*RBC	5.4998	139.695	6.1253	155.583	0.3125	7.938	5.734	145.64	5.891	149.63	0.032	0.81	5/32
NC055XPO*RBC	5.4998	139.695	6.2503	158.758	0.3750	9.525	5.781	146.84	5.969	151.61	0.040	1.02	3/16
ND055XPO*RBC	5.4998	139.695	6.5003	165.108	0.5000	12.700	5.875	149.23	6.125	155.58	0.060	1.52	1/4
NF055XPO*RBC	5.4998	139.695	7.0003	177.808	0.7500	19.050	6.063	154.00	6.438	163.53	0.080	2.03	3/8

*The alphanumeric identification system is used under license. Applicable nomenclature position 1: L & R series.

- 52100 Steel with Thin Dense Chrome Coating
- Large Diameter
- Light Weight
- Small Cross Section
- Snap-Over Ball Separator

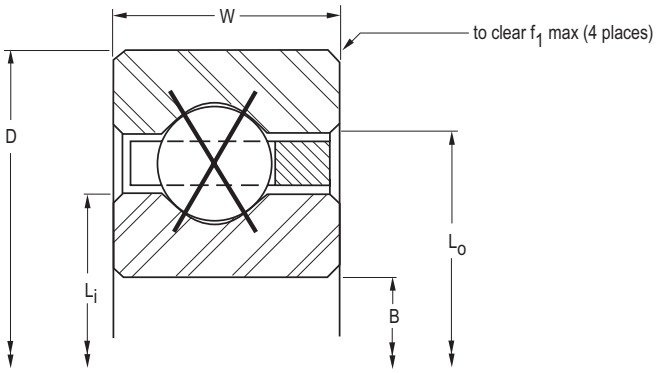

Ball Quantity	Approx. Weight lbs.	Approx. Weight kg	Radial Static lbf	Radial Static N	Radial Dynamic lbf	Radial Dynamic N	Thrust Static lbf	Thrust Static N	Thrust Dynamic lbf	Thrust Dynamic N	Moment Static lbf - in	Moment Static Nm	Moment Dynamic lbf - in	Moment Dynamic Nm	PART NUMBER*
21	0.03	0.014	290	1,290	270	1,200	730	3,250	680	3,020	170	20	160	20	NAA10XLO*RBC
30	0.04	0.018	400	1,780	310	1,380	1,000	4,450	770	3,430	340	40	260	30	NAA15XLO*RBC
33	0.06	0.027	460	2,050	322	1,430	1,140	5,070	805	3,580	440	50	328	37	NAA17XLO*RBC
27	0.10	0.045	680	3,020	514	2,290	1,710	7,610	1,230	5,470	770	90	550	60	NA020XPO*RBC
23	0.16	0.073	930	4,140	758	3,370	2,340	10,410	1,740	7,740	1,080	120	800	90	NB020XPO*RBC
33	0.13	0.059	830	3,690	583	2,590	2,090	9,300	1,320	5,870	1,150	130	730	80	NA025XPO*RBC
28	0.20	0.091	1,140	5,070	848	3,770	2,840	12,630	1,880	8,360	1,600	180	1,060	120	NB025XPO*RBC
39	0.15	0.068	990	4,400	643	2,860	2,470	10,990	1,410	6,270	1,600	180	920	100	NA030XPO*RBC
33	0.24	0.109	1,340	5,960	933	4,150	3,350	14,900	1,990	8,850	2,220	250	1,320	150	NB030XPO*RBC
45	0.18	0.082	1,140	5,070	701	3,120	2,850	12,680	1,480	6,580	2,130	240	1,110	130	NA035XPO*RBC
38	0.27	0.122	1,540	6,850	1,014	4,510	3,860	17,170	2,100	9,340	2,940	330	1,600	180	NB035XPO*RBC
51	0.19	0.086	1,290	5,740	756	3,360	3,220	14,320	1,550	6,890	2,740	310	1,320	150	NA040XPO*RBC
43	0.30	0.136	1,750	7,780	1,091	4,850	4,370	19,440	2,210	9,830	3,770	430	1,900	210	NB040XPO*RBC
35	0.45	0.204	2,100	9,340	1,417	6,300	5,260	23,400	2,810	12,500	4,600	520	2,460	280	NC040XPO*RBC
27	0.78	0.354	3,080	13,700	2,311	10,280	7,700	34,250	4,890	21,750	6,930	780	4,400	500	ND040XPO*RBC
19	1.90	0.862	5,360	23,840	4,665	20,750	13,400	59,610	8,830	39,280	12,730	1,440	8,390	950	NF040XPO*RBC
15	3.60	1.633	8,210	36,520	7,979	35,490	20,520	91,280	15,150	67,390	20,520	2,320	15,150	1,710	NG040XPO*RBC
54	0.20	0.091	1,370	6,090	783	3,480	3,410	15,170	1,590	7,070	3,070	350	1,430	160	NA042XPO*RBC
45	0.31	0.141	1,830	8,140	1,120	4,980	4,570	20,330	2,230	9,920	4,170	470	2,040	230	NB042XPO*RBC
37	0.47	0.213	2,220	9,880	1,464	6,510	5,560	24,730	2,870	12,770	5,140	580	2,650	300	NC042XPO*RBC
28	0.83	0.376	3,190	14,190	2,355	10,480	7,980	35,500	4,920	21,890	7,580	860	4,670	530	ND042XPO*RBC
20	2.00	0.907	5,640	25,090	4,795	21,330	14,110	62,760	8,990	39,990	14,110	1,590	8,993	1,020	NF042XPO*RBC
15	3.80	1.724	8,210	36,520	7,917	35,220	20,520	91,280	15,150	67,390	21,550	2,430	15,910	1,800	NG042XPO*RBC
57	0.22	0.100	1,440	6,410	809	3,600	3,600	16,010	1,610	7,160	3,420	390	1,530	170	NA045XPO*RBC
48	0.33	0.150	1,950	8,670	1,165	5,180	4,880	21,710	2,300	10,230	4,690	530	2,220	250	NB045XPO*RBC
39	0.48	0.218	2,340	10,410	1,510	6,720	5,860	26,070	2,920	12,990	5,710	650	2,850	320	NC045XPO*RBC
30	0.88	0.399	3,420	15,210	2,454	10,920	8,550	38,030	5,080	22,600	8,550	970	5,080	570	ND045XPO*RBC
21	2.10	0.953	5,930	26,380	4,923	21,900	14,810	65,880	9,180	40,830	15,550	1,760	9,695	1,100	NF045XPO*RBC
16	4.00	1.814	8,760	38,970	8,205	36,500	21,890	97,370	15,820	70,370	24,080	2,720	17,400	1,970	NG045XPO*RBC
60	0.23	0.104	1,520	6,760	834	3,710	3,790	16,860	1,650	7,340	3,790	430	1,650	190	NA047XPO*RBC
50	0.34	0.154	2,030	9,030	1,193	5,310	5,080	22,600	2,310	10,280	5,140	580	2,340	260	NB047XPO*RBC
41	0.50	0.227	2,460	10,940	1,556	6,920	6,160	27,400	2,970	13,210	6,320	710	3,040	340	NC047XPO*RBC
31	0.94	0.426	3,530	15,700	2,496	11,100	8,840	39,320	5,130	22,820	9,280	1,050	5,380	610	ND047XPO*RBC
22	2.20	0.998	6,210	27,620	5,048	22,450	15,520	69,040	9,380	41,720	17,070	1,930	10,416	1,180	NF047XPO*RBC
17	4.10	1.860	9,300	41,370	8,487	37,750	23,260	103,470	16,470	73,260	26,740	3,020	18,940	2,140	NG047XPO*RBC
63	0.24	0.109	1,590	7,070	859	3,820	3,980	17,700	1,680	7,470	4,180	470	1,760	200	NA050XPO*RBC
53	0.38	0.172	2,150	9,560	1,236	5,500	5,380	23,930	2,380	10,590	5,720	650	2,520	280	NB050XPO*RBC
43	0.58	0.263	2,590	11,520	1,600	7,120	6,460	28,740	3,040	13,520	6,950	790	3,270	370	NC050XPO*RBC
33	1.00	0.454	3,760	16,730	2,592	11,530	9,410	41,860	5,270	23,440	10,350	1,170	5,800	660	ND050XPO*RBC
23	2.30	1.043	6,490	28,870	5,172	23,010	16,220	72,150	9,520	42,350	18,660	2,110	11,157	1,260	NF050XPO*RBC
18	4.30	1.950	9,850	43,810	8,762	38,980	24,620	109,520	17,110	76,110	29,550	3,340	20,530	2,320	NG050XPO*RBC
69	0.25	0.113	1,750	7,780	908	4,040	4,360	19,390	1,720	7,650	5,020	570	1,970	220	NA055XPO*RBC
58	0.41	0.186	2,360	10,500	1,304	5,800	5,890	26,200	2,460	10,940	6,850	770	2,860	320	NB055XPO*RBC
47	0.59	0.268	2,830	12,590	1,687	7,500	7,060	31,400	3,120	13,880	8,300	940	3,717	420	NC055XPO*RBC
36	1.06	0.481	4,100	18,240	2,725	12,120	10,260	45,640	5,450	24,240	12,310	1,390	6,540	740	ND055XPO*RBC
25	2.50	1.134	7,050	31,360	5,415	24,090	17,630	78,420	9,820	43,680	22,040	2,490	12,696	1,430	NF055XPO*RBC

Refer to the Engineering section for load and speed limitations.

4-POINT CONTACT, X-TYPE

THIN SECTION BALL BEARINGS

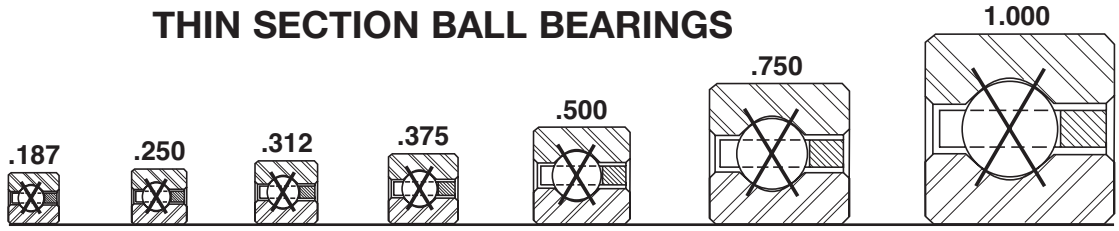

Series:	NAA	NA	NB	NC	ND	NF	NG
Cross Section Size:	3/16"	1/4"	5/16"	3/8"	1/2"	3/4"	1"

PART NUMBER*	NOMINAL DIMENSIONS												
	B Bore		D Outside Diameter		W Width		Land Diameter L_i -Inner Ring		Land Diameter L_o -Outer Ring		f_1 Housing Fillet		Ball Diameter
	in.	mm	in.	mm	in.	mm	in.	mm	in.	mm	in.	mm	in.
NG055XPO*RBC	5.4998	139.695	7.5003	190.508	1.0000	25.400	6.250	158.75	6.750	171.45	0.080	2.03	1/2
NA060XPO*RBC	5.9998	152.395	6.5003	165.108	0.2500	6.350	6.188	157.18	6.313	160.35	0.025	0.64	1/8
NB060XPO*RBC	5.9998	152.395	6.6253	168.283	0.3125	7.938	6.234	158.34	6.391	162.33	0.032	0.81	5/32
NC060XPO*RBC	5.9998	152.395	6.7503	171.458	0.3750	9.525	6.281	159.54	6.469	164.31	0.040	1.02	3/16
ND060XPO*RBC	5.9998	152.395	7.0003	177.808	0.5000	12.700	6.375	161.93	6.625	168.28	0.060	1.52	1/4
NF060XPO*RBC	5.9998	152.395	7.5003	190.508	0.7500	19.050	6.563	166.70	6.938	176.23	0.080	2.03	3/8
NG060XPO*RBC	5.9998	152.395	8.0003	203.208	1.0000	25.400	6.750	171.45	7.250	184.15	0.080	2.03	1/2
NA065XPO*RBC	6.4998	165.095	7.0003	177.808	0.2500	6.350	6.688	169.88	6.813	173.05	0.025	0.64	1/8
NB065XPO*RBC	6.4998	165.095	7.1253	180.983	0.3125	7.938	6.734	171.04	6.891	175.03	0.032	0.81	5/32
NC065XPO*RBC	6.4998	165.095	7.2503	184.158	0.3750	9.525	6.781	172.24	6.969	177.01	0.040	1.02	3/16
ND065XPO*RBC	6.4998	165.095	7.5003	190.508	0.5000	12.700	6.875	174.63	7.125	180.98	0.060	1.52	1/4
NF065XPO*RBC	6.4998	165.095	8.0003	203.208	0.7500	19.050	7.063	179.40	7.438	188.93	0.080	2.03	3/8
NG065XPO*RBC	6.4998	165.095	8.5003	215.908	1.0000	25.400	7.250	184.15	7.750	196.85	0.080	2.03	1/2
NA070XPO*RBC	6.9998	177.795	7.5003	190.508	0.2500	6.350	7.188	182.58	7.313	185.75	0.025	0.64	1/8
NB070XPO*RBC	6.9998	177.795	7.6253	193.683	0.3125	7.938	7.234	183.74	7.391	187.73	0.032	0.81	5/32
NC070XPO*RBC	6.9998	177.795	7.7503	196.858	0.3750	9.525	7.281	184.94	7.469	189.71	0.040	1.02	3/16
ND070XPO*RBC	6.9998	177.795	8.0003	203.208	0.5000	12.700	7.375	187.33	7.625	193.68	0.060	1.52	1/4
NF070XPO*RBC	6.9998	177.795	8.5003	215.908	0.7500	19.050	7.563	192.10	7.938	201.63	0.080	2.03	3/8
NG070XPO*RBC	6.9998	177.795	9.0003	228.608	1.0000	25.400	7.750	196.85	8.250	209.55	0.080	2.03	1/2
NA075XPO*RBC	7.4998	190.495	8.0003	203.208	0.2500	6.350	7.688	195.28	7.813	198.45	0.025	0.64	1/8
NB075XPO*RBC	7.4998	190.495	8.1253	206.383	0.3125	7.938	7.734	196.44	7.891	200.43	0.032	0.81	5/32
NC075XPO*RBC	7.4998	190.495	8.2503	209.558	0.3750	9.525	7.781	197.64	7.969	202.41	0.040	1.02	3/16
ND075XPO*RBC	7.4998	190.495	8.5003	215.908	0.5000	12.700	7.875	200.03	8.125	206.38	0.060	1.52	1/4
NF075XPO*RBC	7.4998	190.495	9.0003	228.608	0.7500	19.050	8.063	204.80	8.438	214.33	0.080	2.03	3/8
NG075XPO*RBC	7.4998	190.495	9.5003	241.308	1.0000	25.400	8.250	209.55	8.750	222.25	0.080	2.03	1/2
NA080XPO*RBC	7.9998	203.195	8.5003	215.908	0.2500	6.350	8.188	207.98	8.313	211.15	0.025	0.64	1/8
NB080XPO*RBC	7.9998	203.195	8.6253	219.083	0.3125	7.938	8.234	209.14	8.391	213.13	0.032	0.81	5/32
NC080XPO*RBC	7.9998	203.195	8.7503	222.258	0.3750	9.525	8.281	210.34	8.469	215.11	0.040	1.02	3/16
ND080XPO*RBC	7.9998	203.195	9.0003	228.608	0.5000	12.700	8.375	212.73	8.625	219.08	0.060	1.52	1/4
NF080XPO*RBC	7.9998	203.195	9.5003	241.308	0.7500	19.050	8.563	217.50	8.938	227.03	0.080	2.03	3/8
NG080XPO*RBC	7.9998	203.195	10.0003	254.008	1.0000	25.400	8.750	222.25	9.250	234.95	0.080	2.03	1/2
NA090XPO*RBC	8.9998	228.595	9.5003	241.308	0.2500	6.350	9.188	233.38	9.313	236.55	0.025	0.64	1/8
NB090XPO*RBC	8.9998	228.595	9.6253	244.483	0.3125	7.938	9.234	234.54	9.391	238.53	0.032	0.81	5/32
NC090XPO*RBC	8.9998	228.595	9.7503	247.658	0.3750	9.525	9.281	235.74	9.469	240.51	0.040	1.02	3/16
ND090XPO*RBC	8.9998	228.595	10.0003	254.008	0.5000	12.700	9.375	238.13	9.625	244.48	0.060	1.52	1/4
NF090XPO*RBC	8.9998	228.595	10.5003	266.708	0.7500	19.050	9.563	242.90	9.938	252.43	0.080	2.03	3/8
NG090XPO*RBC	8.9998	228.595	11.0003	279.408	1.0000	25.400	9.750	247.65	10.250	260.35	0.080	2.03	1/2
NA100XPO*RBC	9.9998	253.995	10.5003	266.708	0.2500	6.350	10.188	258.78	10.313	261.95	0.025	0.64	1/8
NB100XPO*RBC	9.9998	253.995	10.6253	269.883	0.3125	7.938	10.234	259.94	10.391	263.93	0.032	0.81	5/32
NC100XPO*RBC	9.9998	253.995	10.7503	273.058	0.3750	9.525	10.281	261.14	10.469	265.91	0.040	1.02	3/16
ND100XPO*RBC	9.9998	253.995	11.0003	279.408	0.5000	12.700	10.375	263.53	10.625	269.88	0.060	1.52	1/4
NF100XPO*RBC	9.9998	253.995	11.5003	292.108	0.7500	19.050	10.563	268.30	10.938	277.83	0.080	2.03	3/8
NG100XPO*RBC	9.9998	253.995	12.0003	304.808	1.0000	25.400	10.750	273.05	11.250	285.75	0.080	2.03	1/2

*The alphanumeric identification system is used under license. Applicable nomenclature position 1: L & R series.

- 52100 Steel with Thin Dense Chrome Coating
- Large Diameter
- Light Weight
- Small Cross Section
- Snap-Over Ball Separator

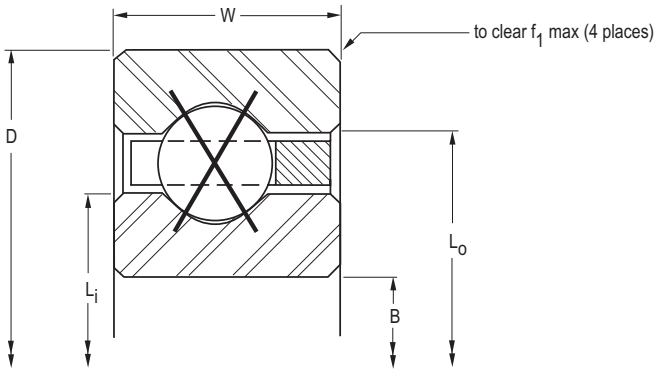

Ball Quantity	Approx. Weight lbs.	Approx. Weight kg	Radial Static lbf	Radial Static N	Radial Dynamic lbf	Radial Dynamic N	Thrust Static lbf	Thrust Static N	Thrust Dynamic lbf	Thrust Dynamic N	Moment Static lbf - in	Moment Static Nm	Moment Dynamic lbf - in	Moment Dynamic Nm	PART NUMBER*
19	4.70	2.132	10,400	46,260	8,979	39,940	25,990	115,610	17,460	77,670	33,790	3,820	22,700	2,560	NG055XPO*RBC
75	0.28	0.127	1,900	8,450	955	4,250	4,740	21,080	1,780	7,920	5,930	670	2,240	250	NA060XPO*RBC
63	0.44	0.200	2,560	11,390	1,371	6,100	6,400	28,470	2,540	11,300	8,080	910	3,247	370	NB060XPO*RBC
51	0.63	0.286	3,070	13,660	1,770	7,870	7,660	34,070	3,220	14,320	9,770	1,100	4,234	480	NC060XPO*RBC
39	1.16	0.526	4,450	19,790	2,855	12,700	11,120	49,460	5,610	24,950	14,450	1,630	7,290	820	ND060XPO*RBC
27	2.70	1.225	7,620	33,900	5,651	25,140	19,050	84,740	10,150	45,150	25,710	2,900	14,311	1,620	NF060XPO*RBC
21	5.10	2.313	11,490	51,110	9,503	42,270	28,730	127,800	18,290	81,360	40,220	4,540	25,610	2,890	NG060XPO*RBC
81	0.30	0.136	2,050	9,120	1,001	4,450	5,120	22,770	1,840	8,180	6,910	780	2,535	290	NA065XPO*RBC
68	0.47	0.213	2,760	12,280	1,435	6,380	6,910	30,740	2,590	11,520	9,410	1,060	3,668	410	NB065XPO*RBC
55	0.68	0.308	3,310	14,720	1,851	8,230	8,270	36,790	3,300	14,680	11,370	1,280	4,775	540	NC065XPO*RBC
42	1.22	0.553	4,790	21,310	2,980	13,260	11,970	53,250	5,740	25,530	16,760	1,890	8,040	910	ND065XPO*RBC
29	2.90	1.315	8,180	36,390	5,880	26,160	20,460	91,010	10,380	46,170	29,660	3,350	15,993	1,810	NF065XPO*RBC
22	5.40	2.449	12,040	53,560	9,713	43,210	30,100	133,890	18,520	82,380	45,140	5,100	27,770	3,140	NG065XPO*RBC
87	0.31	0.141	2,200	9,790	1,046	4,650	5,500	24,470	1,850	8,230	7,980	900	2,844	320	NA070XPO*RBC
73	0.50	0.227	2,970	13,210	1,498	6,660	7,420	33,010	2,660	11,830	10,850	1,230	4,109	460	NB070XPO*RBC
59	0.73	0.331	3,550	15,790	1,931	8,590	8,870	39,460	3,420	15,210	13,080	1,480	5,341	600	NC070XPO*RBC
45	1.31	0.594	5,130	22,820	3,103	13,800	12,830	57,070	5,880	26,160	19,240	2,170	8,810	1,000	ND070XPO*RBC
31	3.20	1.451	8,750	38,920	6,103	27,150	21,870	97,280	10,640	47,330	33,890	3,830	17,744	2,000	NF070XPO*RBC
24	5.80	2.631	13,130	58,410	10,208	45,410	32,830	146,040	19,330	85,980	52,530	5,940	30,930	3,490	NG070XPO*RBC
93	0.34	0.154	2,350	10,450	1,089	4,840	5,880	26,160	1,890	8,410	9,120	1,030	3,165	360	NA075XPO*RBC
78	0.53	0.240	3,170	14,100	1,559	6,930	7,920	35,230	2,730	12,140	12,380	1,400	4,568	520	NB075XPO*RBC
63	0.78	0.354	3,790	16,860	2,007	8,930	9,470	42,120	3,480	15,480	14,910	1,680	5,930	670	NC075XPO*RBC
48	1.41	0.640	5,470	24,330	3,222	14,330	13,680	60,850	6,060	26,960	21,890	2,470	9,700	1,100	ND075XPO*RBC
33	3.40	1.542	9,310	41,410	6,323	28,130	23,280	103,550	10,930	48,620	38,410	4,340	19,568	2,210	NF075XPO*RBC
25	6.10	2.767	13,680	60,850	10,410	46,310	34,200	152,130	19,460	86,560	58,140	6,570	33,196	3,750	NG075XPO*RBC
99	0.38	0.172	2,500	11,120	1,131	5,030	6,260	27,850	1,970	8,760	10,330	1,170	3,499	400	NA080XPO*RBC
83	0.57	0.259	3,370	14,990	1,618	7,200	8,430	37,500	2,790	12,410	14,020	1,580	5,045	570	NB080XPO*RBC
67	0.84	0.381	4,030	17,930	2,082	9,260	10,070	44,790	3,560	15,840	16,870	1,910	6,542	740	NC080XPO*RBC
51	1.53	0.694	5,810	25,840	3,338	14,850	14,540	64,680	6,170	27,450	24,710	2,790	10,643	1,200	ND080XPO*RBC
35	3.50	1.588	9,880	43,950	6,535	29,070	24,690	109,830	11,190	49,780	43,200	4,880	21,453	2,420	NF080XPO*RBC
27	6.50	2.948	14,770	65,700	10,882	48,410	36,940	164,320	20,230	89,990	66,480	7,510	36,743	4,150	NG080XPO*RBC
111	0.44	0.200	2,810	12,500	1,212	5,390	7,020	31,230	2,040	9,070	12,990	1,470	4,204	470	NA090XPO*RBC
93	0.66	0.299	3,780	16,810	1,732	7,700	9,450	42,040	2,890	12,860	17,600	1,990	6,050	680	NB090XPO*RBC
75	0.94	0.426	4,510	20,060	2,226	9,900	11,270	50,130	3,690	16,410	21,130	2,390	7,830	880	NC090XPO*RBC
57	1.72	0.780	6,500	28,910	3,561	15,840	16,250	72,280	6,410	28,510	30,870	3,490	12,693	1,430	ND090XPO*RBC
39	3.90	1.769	11,000	48,930	6,947	30,900	27,510	122,370	11,630	51,730	53,640	6,060	25,410	2,870	NF090XPO*RBC
30	7.20	3.266	16,420	73,040	11,526	51,270	41,040	182,560	21,020	93,500	82,080	9,270	43,240	4,890	NG090XPO*RBC
123	0.50	0.227	3,110	13,830	1,289	5,730	7,780	34,610	2,180	9,700	15,940	1,800	4,956	560	NA100XPO*RBC
103	0.73	0.331	4,190	18,640	1,841	8,190	10,460	46,530	3,080	13,700	21,580	2,440	7,121	800	NB100XPO*RBC
83	1.06	0.481	4,990	22,200	2,364	10,520	12,470	55,470	3,930	17,480	25,880	2,920	9,201	1,040	NC100XPO*RBC
63	1.88	0.853	7,180	31,940	3,776	16,800	17,960	79,890	6,680	29,710	37,710	4,260	14,872	1,680	ND100XPO*RBC
43	4.30	1.950	12,130	53,960	7,342	32,660	30,330	134,910	12,100	53,820	65,210	7,370	29,608	3,350	NF100XPO*RBC
33	7.90	3.583	18,060	80,330	12,147	54,030	45,140	200,790	21,790	96,930	99,320	11,220	50,124	5,660	NG100XPO*RBC

Refer to the Engineering section for load and speed limitations.

4-POINT CONTACT, X-TYPE

THIN SECTION BALL BEARINGS

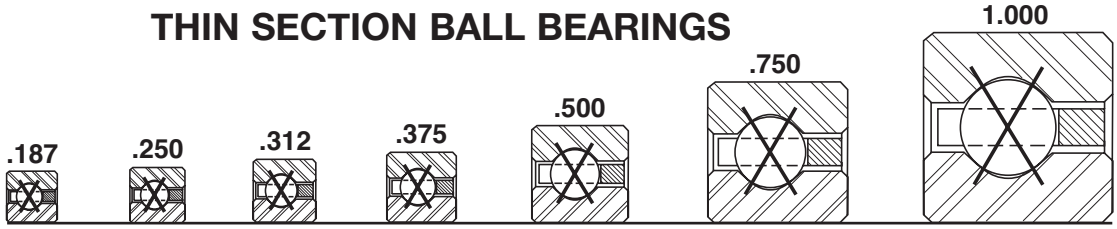

Series:	NAA	NA	NB	NC	ND	NF	NG
Cross Section Size:	3/16"	1/4"	5/16"	3/8"	1/2"	3/4"	1"

PART NUMBER*	NOMINAL DIMENSIONS												
	B Bore		D Outside Diameter		W Width		Land Diameter L_i -Inner Ring		Land Diameter L_o -Outer Ring		f_1 Housing Fillet		Ball Diameter
	in.	mm	in.	mm	in.	mm	in.	mm	in.	mm	in.	mm	in.
NA110XPO*RBC	10.9998	279.395	11.5003	292.108	0.2500	6.350	11.188	284.18	11.313	287.35	0.025	0.64	1/8
NB110XPO*RBC	10.9998	279.395	11.6253	295.283	0.3125	7.938	11.234	285.34	11.391	289.33	0.032	0.81	5/32
NC110XPO*RBC	10.9998	279.395	11.7503	298.458	0.3750	9.525	11.281	286.54	11.469	291.31	0.040	1.02	3/16
ND110XPO*RBC	10.9998	279.395	12.0003	304.808	0.5000	12.700	11.375	288.93	11.625	295.28	0.060	1.52	1/4
NF110XPO*RBC	10.9998	279.395	12.5003	317.508	0.7500	19.050	11.563	293.70	11.938	303.23	0.080	2.03	3/8
NG110XPO*RBC	10.9998	279.395	13.0003	330.208	1.0000	25.400	11.750	298.45	12.250	311.15	0.080	2.03	1/2
NA120XPO*RBC	11.9998	304.795	12.5003	317.508	0.2500	6.350	12.188	309.58	12.313	312.75	0.025	0.64	1/8
NB120XPO*RBC	11.9998	304.795	12.6253	320.683	0.3125	7.938	12.234	310.74	12.391	314.73	0.032	0.81	5/32
NC120XPO*RBC	11.9998	304.795	12.7503	323.858	0.3750	9.525	12.281	311.94	12.469	316.71	0.040	1.02	3/16
ND120XPO*RBC	11.9998	304.795	13.0003	330.208	0.5000	12.700	12.375	314.33	12.625	320.68	0.060	1.52	1/4
NF120XPO*RBC	11.9998	304.795	13.5003	342.908	0.7500	19.050	12.563	319.10	12.938	328.63	0.080	2.03	3/8
NG120XPO*RBC	11.9998	304.795	14.0003	355.608	1.0000	25.400	12.750	323.85	13.250	336.55	0.080	2.03	1/2
NB140XPO*RBC	13.9998	355.595	14.6253	371.483	0.3125	7.938	14.234	361.54	14.391	365.53	0.032	0.81	5/32
NC140XPO*RBC	13.9998	355.595	14.7503	374.658	0.3750	9.525	14.281	362.74	14.469	367.51	0.040	1.02	3/16
ND140XPO*RBC	13.9998	355.595	15.0003	381.008	0.5000	12.700	14.375	365.13	14.625	371.48	0.060	1.52	1/4
NF140XPO*RBC	13.9998	355.595	15.5003	393.708	0.7500	19.050	14.563	369.90	14.938	379.43	0.080	2.03	3/8
NG140XPO*RBC	13.9998	355.595	16.0003	406.408	1.0000	25.400	14.750	374.65	15.250	387.35	0.080	2.03	1/2
NB160XPO*RBC	15.9998	406.395	16.6253	422.283	0.3125	7.938	16.234	412.34	16.391	416.33	0.032	0.81	5/32
NC160XPO*RBC	15.9998	406.395	16.7503	425.458	0.3750	9.525	16.281	413.54	16.469	418.31	0.040	1.02	3/16
ND160XPO*RBC	15.9998	406.395	17.0003	431.808	0.5000	12.700	16.375	415.93	16.625	422.28	0.060	1.52	1/4
NF160XPO*RBC	15.9998	406.395	17.5003	444.508	0.7500	19.050	16.563	420.70	16.938	430.23	0.080	2.03	3/8
NG160XPO*RBC	15.9998	406.395	18.0003	457.208	1.0000	25.400	16.750	425.45	17.250	438.15	0.080	2.03	1/2
NB180XPO*RBC	17.9998	457.195	18.6253	473.083	0.3125	7.938	18.234	463.14	18.391	467.13	0.032	0.81	5/32
NC180XPO*RBC	17.9998	457.195	18.7503	476.258	0.3750	9.525	18.281	464.34	18.469	469.11	0.040	1.02	3/16
ND180XPO*RBC	17.9998	457.195	19.0003	482.608	0.5000	12.700	18.375	466.73	18.625	473.08	0.060	1.52	1/4
NF180XPO*RBC	17.9998	457.195	19.5003	495.308	0.7500	19.050	18.563	471.50	18.938	481.03	0.080	2.03	3/8
NG180XPO*RBC	17.9998	457.195	20.0003	508.008	1.0000	25.400	18.750	476.25	19.250	488.95	0.080	2.03	1/2
NB200XPO*RBC	19.9998	507.995	20.6253	523.883	0.3125	7.938	20.234	513.94	20.391	517.93	0.032	0.81	5/32
NC200XPO*RBC	19.9998	507.995	20.7503	527.058	0.3750	9.525	20.281	515.14	20.469	519.91	0.040	1.02	3/16
ND200XPO*RBC	19.9998	507.995	21.0003	533.408	0.5000	12.700	20.375	517.53	20.625	523.88	0.060	1.52	1/4
NF200XPO*RBC	19.9998	507.995	21.5003	546.108	0.7500	19.050	20.563	522.30	20.938	531.83	0.080	2.03	3/8
NG200XPO*RBC	19.9998	507.995	22.0003	558.808	1.0000	25.400	20.750	527.05	21.250	539.75	0.080	2.03	1/2
NC250XPO*RBC	24.9998	634.995	25.7503	654.058	0.3750	9.525	25.281	642.14	25.469	646.91	0.040	1.02	3/16
ND250XPO*RBC	24.9998	634.995	26.0003	660.408	0.5000	12.700	25.375	644.53	25.625	650.88	0.060	1.52	1/4
NF250XPO*RBC	24.9998	634.995	26.5003	673.108	0.7500	19.050	25.563	649.30	25.938	658.83	0.080	2.03	3/8
NG250XPO*RBC	24.9998	634.995	27.0003	685.808	1.0000	25.400	25.750	654.05	26.250	666.75	0.080	2.03	1/2
NC300XPO*RBC	29.9998	761.995	30.7503	781.058	0.3750	9.525	30.281	769.14	30.469	773.91	0.040	1.02	3/16
ND300XPO*RBC	29.9998	761.995	31.0003	787.408	0.5000	12.700	30.375	771.53	30.625	777.88	0.060	1.52	1/4
NF300XPO*RBC	29.9998	761.995	31.5003	800.108	0.7500	19.050	30.563	776.30	30.938	785.83	0.080	2.03	3/8
NG300XPO*RBC	29.9998	761.995	32.0003	812.808	1.0000	25.400	30.750	781.05	31.250	793.75	0.080	2.03	1/2
NF350XPO*RBC	34.9998	888.995	36.5003	927.108	0.7500	19.050	35.563	903.30	35.938	912.83	0.080	2.03	3/8
NG350XPO*RBC	34.9998	888.995	37.0003	939.808	1.0000	25.400	35.750	908.05	36.250	920.75	0.080	2.03	1/2
NF400XPO*RBC	39.9998	1015.995	41.5003	1054.108	0.7500	19.050	40.563	1030.30	40.938	1039.83	0.080	2.03	3/8
NG400XPO*RBC	39.9998	1015.995	42.0003	1066.808	1.0000	25.400	40.750	1035.05	41.250	1047.75	0.080	2.03	1/2

*The alphanumeric identification system is used under license. Applicable nomenclature position 1: L & R series.

- 52100 Steel with Thin Dense Chrome Coating
- Large Diameter
- Light Weight
- Small Cross Section
- Snap-Over Ball Separator

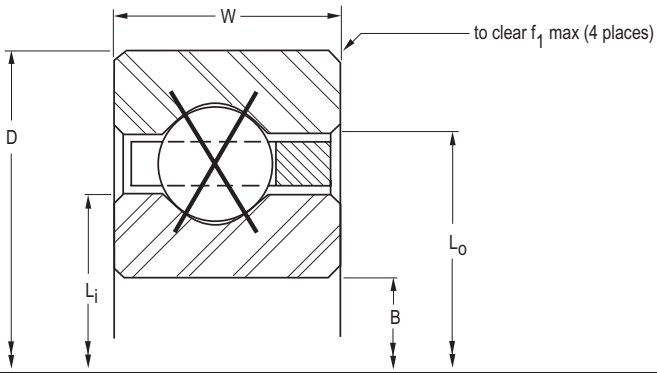

Ball Quantity	Approx. Weight lbs.	Approx. Weight kg	Radial Static lbf	Radial Static N	Radial Dynamic lbf	Radial Dynamic N	Thrust Static lbf	Thrust Static N	Thrust Dynamic lbf	Thrust Dynamic N	Moment Static lbf - in	Moment Static Nm	Moment Dynamic lbf - in	Moment Dynamic Nm	PART NUMBER*
			LOAD RATINGS												
135	0.52	0.236	3,410	15,170	1,362	6,060	8,540	37,990	2,320	10,320	19,210	2,170	5,750	650	NA110XPO*RBC
113	0.75	0.340	4,590	20,420	1,945	8,650	11,480	51,070	3,280	14,590	25,970	2,930	8,254	930	NB110XPO*RBC
91	1.16	0.526	5,470	24,330	2,496	11,100	13,680	60,850	4,180	18,590	31,110	3,510	10,651	1,200	NC110XPO*RBC
69	2.06	0.934	7,870	35,010	3,981	17,710	19,670	87,500	6,830	30,380	45,230	5,110	17,173	1,940	ND110XPO*RBC
47	4.80	2.177	13,260	58,980	7,721	34,340	33,150	147,460	12,490	55,560	77,910	8,800	34,032	3,850	NF110XPO*RBC
36	8.60	3.901	19,700	87,630	12,739	56,670	49,250	219,070	22,530	100,220	118,200	13,350	57,347	6,480	NG110XPO*RBC
147	0.56	0.254	3,720	16,550	1,433	6,370	9,300	41,370	2,450	10,900	22,770	2,570	6,587	740	NA120XPO*RBC
123	0.83	0.376	5,000	22,240	2,045	9,100	12,500	55,600	3,470	15,440	30,770	3,480	9,446	1,070	NB120XPO*RBC
99	1.25	0.567	5,950	26,470	2,622	11,660	14,880	66,190	4,420	19,660	36,830	4,160	12,174	1,380	NC120XPO*RBC
75	2.25	1.021	8,550	38,030	4,178	18,580	21,380	95,100	7,080	31,490	53,440	6,040	19,590	2,210	ND120XPO*RBC
51	5.20	2.359	14,390	64,010	8,084	35,960	35,970	160,000	13,190	58,670	91,730	10,360	38,666	4,370	NF120XPO*RBC
39	9.30	4.218	21,340	94,930	13,315	59,230	53,350	237,310	23,180	103,110	138,700	15,670	64,935	7,340	NG120XPO*RBC
143	1.05	0.476	5,810	25,840	2,234	9,940	14,530	64,630	3,840	17,080	41,580	4,700	11,994	1,360	NB140XPO*RBC
115	1.52	0.689	6,910	30,740	2,862	12,730	17,280	76,870	4,890	21,750	49,690	5,610	15,434	1,740	NC140XPO*RBC
87	2.73	1.238	9,920	44,130	4,551	20,240	24,800	110,320	7,670	34,120	71,910	8,120	24,755	2,800	ND140XPO*RBC
59	6.00	2.722	16,650	74,060	8,775	39,030	41,620	185,130	14,530	64,630	122,800	13,870	48,556	5,490	NF140XPO*RBC
45	10.80	4.899	24,620	109,520	14,404	64,070	61,560	273,830	24,300	108,090	184,700	20,870	81,056	9,160	NG140XPO*RBC
163	1.20	0.544	6,620	29,450	2,410	10,720	16,560	73,660	4,190	18,640	54,020	6,100	14,750	1,670	NB160XPO*RBC
131	1.73	0.785	7,880	35,050	3,086	13,730	19,690	87,590	5,330	23,710	64,480	7,290	18,955	2,140	NC160XPO*RBC
99	3.10	1.406	11,290	50,220	4,899	21,790	28,220	125,530	8,360	37,190	93,110	10,520	30,325	3,430	ND160XPO*RBC
67	7.10	3.221	18,900	84,070	9,421	41,910	47,260	210,220	15,820	70,370	158,300	17,890	59,200	6,690	NF160XPO*RBC
51	12.30	5.579	27,910	124,150	15,425	68,610	69,770	310,350	25,510	113,470	237,200	26,800	98,373	11,110	NG160XPO*RBC
183	1.35	0.612	7,440	33,090	2,576	11,460	18,590	82,690	4,520	20,110	68,090	7,690	17,694	2,000	NB180XPO*RBC
147	1.94	0.880	8,840	39,320	3,295	14,660	22,090	98,260	5,760	25,620	81,190	9,170	22,712	2,570	NC180XPO*RBC
111	3.48	1.579	12,650	56,270	5,226	23,250	31,640	140,740	9,030	40,170	117,000	13,220	36,268	4,100	ND180XPO*RBC
75	7.90	3.583	21,160	94,120	10,028	44,610	52,900	235,310	17,060	75,890	198,400	22,420	70,537	7,970	NF180XPO*RBC
57	13.70	6.214	31,190	138,740	16,386	72,890	77,980	346,870	27,410	121,930	296,300	33,480	116,793	13,200	NG180XPO*RBC
203	1.50	0.680	8,250	36,700	2,731	12,150	20,620	91,720	4,850	21,570	83,780	9,470	20,813	2,350	NB200XPO*RBC
163	2.16	0.980	9,800	43,590	3,492	15,530	24,500	108,980	6,170	27,450	99,830	11,280	26,695	3,020	NC200XPO*RBC
123	3.85	1.746	14,020	62,360	5,534	24,620	35,060	155,950	9,670	43,010	143,700	16,240	42,561	4,810	ND200XPO*RBC
83	8.90	4.037	23,420	104,180	10,602	47,160	58,550	260,440	18,250	81,180	243,000	27,460	82,528	9,320	NF200XPO*RBC
63	15.80	7.167	34,470	153,330	17,293	76,920	86,180	383,350	29,300	130,330	362,000	40,900	136,238	15,390	NG200XPO*RBC
203	2.69	1.220	12,200	54,270	3,941	17,530	30,510	135,720	7,140	31,760	154,800	17,490	37,518	4,240	NC250XPO*RBC
153	4.79	2.173	17,440	77,580	6,235	27,730	43,610	193,990	11,180	49,730	222,400	25,130	59,649	6,740	ND250XPO*RBC
103	10.90	4.944	29,060	129,270	11,909	52,970	72,650	323,160	21,070	93,720	374,200	42,280	115,037	13,000	NF250XPO*RBC
78	19.50	8.845	42,680	189,850	19,360	86,120	106,700	474,630	33,780	150,260	554,900	62,700	188,838	21,340	NG250XPO*RBC
243	3.21	1.456	14,610	64,990	4,338	19,300	36,520	162,450	8,050	35,810	221,900	25,070	49,436	5,590	NC300XPO*RBC
183	5.73	2.599	20,860	92,790	6,856	30,500	52,160	232,020	12,600	56,050	318,100	35,940	78,447	8,860	ND300XPO*RBC
123	13.00	5.897	34,700	154,350	13,065	58,120	86,760	385,930	23,720	105,510	533,600	60,290	150,708	17,030	NF300XPO*RBC
93	23.30	10.569	50,890	226,370	21,200	94,300	127,200	565,810	37,980	168,940	788,800	89,120	246,541	27,860	NG300XPO*RBC
143	15.10	6.849	40,350	179,490	14,100	62,720	100,900	448,830	26,220	116,630	721,200	81,480	189,106	21,370	NF350XPO*RBC
108	27.10	12.292	59,100	262,890	22,845	101,620	147,700	657,000	41,970	186,690	1,064,000	120,220	308,527	34,860	NG350XPO*RBC
163	17.20	7.802	45,990	204,570	15,034	66,870	115,000	511,550	28,620	127,310	937,100	105,880	229,832	25,970	NF400XPO*RBC
123	30.80	13.971	67,310	299,410	24,332	108,230	168,300	748,640	45,770	203,600	1,380,000	155,920	374,256	42,290	NG400XPO*RBC

Refer to the Engineering section for load and speed limitations.

RADIAL CONTACT, C-TYPE

THIN SECTION BALL BEARINGS

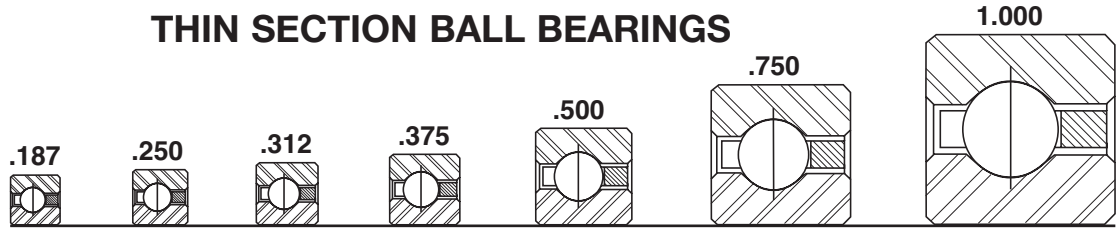

Series:	SAA	SA	SB	SC	SD	SF	SG
Cross Section Size:	3/16"	1/4"	5/16"	3/8"	1/2"	3/4"	1"

PART NUMBER*	NOMINAL DIMENSIONS												
	B Bore		D Outside Diameter		W Width		Land Diameter L_i -Inner Ring		Land Diameter L_o -Outer Ring		f_1 Housing Fillet		Ball Diameter
	in.	mm	in.	mm	in.	mm	in.	mm	in.	mm	in.	mm	in.
SAA10CL0*RBC	1.0000	25.400	1.3750	34.925	0.1875	4.763	1.141	28.98	1.234	31.34	0.015	0.38	3/32
SAA15CL0*RBC	1.5000	38.100	1.8750	47.625	0.1875	4.763	1.641	41.68	1.734	44.04	0.015	0.38	3/32
SAA17CL0*RBC	1.7500	44.450	2.1250	53.975	0.1875	4.760	1.890	48.00	1.985	50.42	0.015	0.38	3/32
SA020CP0*RBC	2.0000	50.800	2.5000	63.500	0.2500	6.350	2.188	55.58	2.313	58.75	0.025	0.64	1/8
SB020CP0*RBC	2.0000	50.800	2.6250	66.675	0.3125	7.938	2.234	56.74	2.391	60.73	0.032	0.81	5/32
SA025CP0*RBC	2.5000	63.500	3.0000	76.200	0.2500	6.350	2.688	68.28	2.813	71.45	0.025	0.64	1/8
SB025CP0*RBC	2.5000	63.500	3.1250	79.375	0.3125	7.938	2.734	69.44	2.891	73.43	0.032	0.81	5/32
SA030CP0*RBC	3.0000	76.200	3.5000	88.900	0.2500	6.350	3.188	80.98	3.313	84.15	0.025	0.64	1/8
SB030CP0*RBC	3.0000	76.200	3.6250	92.075	0.3125	7.938	3.234	82.14	3.391	86.13	0.032	0.81	5/32
SA035CP0*RBC	3.5000	88.900	4.0000	101.600	0.2500	6.350	3.688	93.68	3.813	96.85	0.025	0.64	1/8
SB035CP0*RBC	3.5000	88.900	4.1250	104.775	0.3125	7.938	3.734	94.84	3.897	98.98	0.032	0.81	5/32
SA040CP0*RBC	4.0000	101.600	4.5000	114.300	0.2500	6.350	4.188	106.38	4.313	109.55	0.025	0.64	1/8
SB040CP0*RBC	4.0000	101.600	4.6250	117.475	0.3125	7.938	4.234	107.54	4.391	111.53	0.032	0.81	5/32
SC040CP0*RBC	4.0000	101.600	4.7500	120.650	0.3750	9.525	4.281	108.74	4.469	113.51	0.040	1.02	3/16
SD040CP0*RBC	4.0000	101.600	5.0000	127.000	0.5000	12.700	4.375	111.13	4.625	117.48	0.060	1.52	1/4
SF040CP0*RBC	4.0000	101.600	5.5000	139.700	0.7500	19.050	4.563	115.90	4.938	125.43	0.080	2.03	3/8
SG040CP0*RBC	4.0000	101.600	6.0000	152.400	1.0000	25.400	4.750	120.65	5.250	133.35	0.080	2.03	1/2
SA042CP0*RBC	4.2500	107.950	4.7500	120.650	0.2500	6.350	4.438	112.73	4.563	115.90	0.025	0.64	1/8
SB042CP0*RBC	4.2500	107.950	4.8750	123.825	0.3125	7.938	4.484	113.89	4.641	117.88	0.032	0.81	5/32
SC042CP0*RBC	4.2500	107.950	5.0000	127.000	0.3750	9.525	4.531	115.09	4.719	119.86	0.040	1.02	3/16
SD042CP0*RBC	4.2500	107.950	5.2500	133.350	0.5000	12.700	4.625	117.48	4.875	123.83	0.060	1.52	1/4
SF042CP0*RBC	4.2500	107.950	5.7500	146.050	0.7500	19.050	4.813	122.25	5.188	131.78	0.080	2.03	3/8
SG042CP0*RBC	4.2500	107.950	6.2500	158.750	1.0000	25.400	5.000	127.00	5.500	139.70	0.080	2.03	1/2
SA045CP0*RBC	4.5000	114.300	5.0000	127.000	0.2500	6.350	4.688	119.08	4.813	122.25	0.025	0.64	1/8
SB045CP0*RBC	4.5000	114.300	5.1250	130.175	0.3125	7.938	4.734	120.24	4.891	124.23	0.032	0.81	5/32
SC045CP0*RBC	4.5000	114.300	5.2500	133.350	0.3750	9.525	4.781	121.44	4.969	126.21	0.040	1.02	3/16
SD045CP0*RBC	4.5000	114.300	5.5000	139.700	0.5000	12.700	4.875	123.83	5.125	130.18	0.060	1.52	1/4
SF045CP0*RBC	4.5000	114.300	6.0000	152.400	0.7500	19.050	5.063	128.60	5.438	138.13	0.080	2.03	3/8
SG045CP0*RBC	4.5000	114.300	6.5000	165.100	1.0000	25.400	5.250	133.35	5.750	146.05	0.080	2.03	1/2
SA047CP0*RBC	4.7500	120.650	5.2500	133.350	0.2500	6.350	4.938	125.43	5.063	128.60	0.025	0.64	1/8
SB047CP0*RBC	4.7500	120.650	5.3750	136.525	0.3125	7.938	4.984	126.59	5.141	130.58	0.032	0.81	5/32
SC047CP0*RBC	4.7500	120.650	5.5000	139.700	0.3750	9.525	5.031	127.79	5.219	132.56	0.040	1.02	3/16
SD047CP0*RBC	4.7500	120.650	5.7500	146.050	0.5000	12.700	5.125	130.18	5.375	136.53	0.060	1.52	1/4
SF047CP0*RBC	4.7500	120.650	6.2500	158.750	0.7500	19.050	5.313	134.95	5.688	144.48	0.080	2.03	3/8
SG047CP0*RBC	4.7500	120.650	6.7500	171.450	1.0000	25.400	5.500	139.70	6.000	152.40	0.080	2.03	1/2
SA050CP0*RBC	5.0000	127.000	5.5000	139.700	0.2500	6.350	5.188	131.78	5.313	134.95	0.025	0.64	1/8
SB050CP0*RBC	5.0000	127.000	5.6250	142.875	0.3125	7.938	5.234	132.94	5.391	136.93	0.032	0.81	5/32
SC050CP0*RBC	5.0000	127.000	5.7500	146.050	0.3750	9.525	5.281	134.14	5.469	138.91	0.040	1.02	3/16
SD050CP0*RBC	5.0000	127.000	6.0000	152.400	0.5000	12.700	5.375	136.53	5.625	142.88	0.060	1.52	1/4
SF050CP0*RBC	5.0000	127.000	6.5000	165.100	0.7500	19.050	5.563	141.30	5.938	150.83	0.080	2.03	3/8
SG050CP0*RBC	5.0000	127.000	7.0000	177.800	1.0000	25.400	5.750	146.05	6.250	158.75	0.080	2.03	1/2
SA055CP0*RBC	5.5000	139.700	6.0000	152.400	0.2500	6.350	5.688	144.48	5.813	147.65	0.025	0.64	1/8
SB055CP0*RBC	5.5000	139.700	6.1250	155.575	0.3125	7.938	5.734	145.64	5.891	149.63	0.032	0.81	5/32
SC055CP0*RBC	5.5000	139.700	6.2500	158.750	0.3750	9.525	5.781	146.84	5.969	151.61	0.040	1.02	3/16
SD055CP0*RBC	5.5000	139.700	6.5000	165.100	0.5000	12.700	5.875	149.23	6.125	155.58	0.060	1.52	1/4
SF055CP0*RBC	5.5000	139.700	7.0000	177.800	0.7500	19.050	6.063	154.00	6.438	163.53	0.080	2.03	3/8

*The alphanumeric identification system is used under license.

- 440C Stainless Steel
- Large Diameter
- Light Weight
- Small Cross Section
- Snap-Over Ball Separator

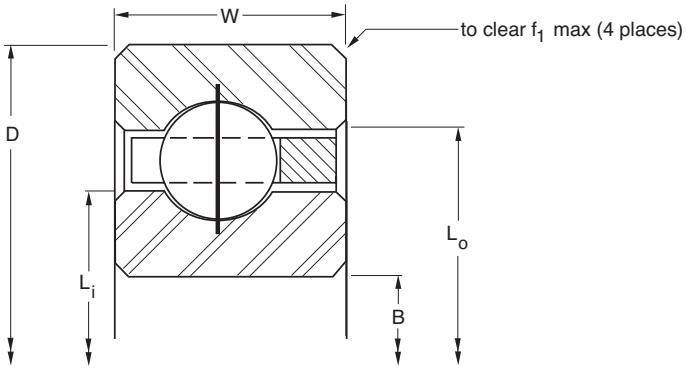

Ball Quantity	Approx. Weight lbs.	Approx. Weight kg	LOAD RATINGS Radial Static lbf	Radial Static N	Radial Dynamic lbf	Radial Dynamic N	Thrust Static lbf	Thrust Static N	Thrust Dynamic lbf	Thrust Dynamic N	Moment Static lbf - in	Moment Static Nm	Moment Dynamic lbf - in	Moment Dynamic Nm	PART NUMBER*
22	0.03	0.014	290	1,290	300	1,330	N/A	N/A	N/A	N/A	N/A	N/A	N/A	N/A	SAA10CL0*RBC
30	0.04	0.018	400	1,780	350	1,560	N/A	N/A	N/A	N/A	N/A	N/A	N/A	N/A	SAA15CL0*RBC
33	0.06	0.027	460	2,050	371	1,650	N/A	N/A	N/A	N/A	N/A	N/A	N/A	N/A	SAA17CL0*RBC
27	0.10	0.045	680	3,020	560	2,490	N/A	N/A	N/A	N/A	N/A	N/A	N/A	N/A	SA020CP0*RBC
23	0.16	0.073	930	4,140	800	3,560	N/A	N/A	N/A	N/A	N/A	N/A	N/A	N/A	SB020CP0*RBC
33	0.13	0.059	830	3,690	610	2,710	N/A	N/A	N/A	N/A	N/A	N/A	N/A	N/A	SA025CP0*RBC
28	0.20	0.091	1,140	5,070	860	3,830	N/A	N/A	N/A	N/A	N/A	N/A	N/A	N/A	SB025CP0*RBC
39	0.15	0.068	990	4,400	650	2,890	N/A	N/A	N/A	N/A	N/A	N/A	N/A	N/A	SA030CP0*RBC
33	0.24	0.109	1,340	5,960	920	4,090	N/A	N/A	N/A	N/A	N/A	N/A	N/A	N/A	SB030CP0*RBC
45	0.18	0.082	1,140	5,070	690	3,070	N/A	N/A	N/A	N/A	N/A	N/A	N/A	N/A	SA035CP0*RBC
38	0.27	0.122	1,540	6,850	970	4,310	N/A	N/A	N/A	N/A	N/A	N/A	N/A	N/A	SB035CP0*RBC
51	0.19	0.086	1,290	5,740	720	3,200	N/A	N/A	N/A	N/A	N/A	N/A	N/A	N/A	SA040CP0*RBC
43	0.30	0.136	1,750	7,780	1,020	4,540	N/A	N/A	N/A	N/A	N/A	N/A	N/A	N/A	SB040CP0*RBC
35	0.45	0.204	2,100	9,340	1,290	5,740	N/A	N/A	N/A	N/A	N/A	N/A	N/A	N/A	SC040CP0*RBC
27	0.78	0.354	3,080	13,700	2,250	10,010	N/A	N/A	N/A	N/A	N/A	N/A	N/A	N/A	SD040CP0*RBC
19	1.90	0.862	5,360	23,840	3,940	17,530	N/A	N/A	N/A	N/A	N/A	N/A	N/A	N/A	SF040CP0*RBC
15	3.60	1.633	8,210	36,520	6,700	29,800	N/A	N/A	N/A	N/A	N/A	N/A	N/A	N/A	SG040CP0*RBC
54	0.20	0.091	1,370	6,090	730	3,250	N/A	N/A	N/A	N/A	N/A	N/A	N/A	N/A	SA042CP0*RBC
45	0.31	0.141	1,830	8,140	1,030	4,580	N/A	N/A	N/A	N/A	N/A	N/A	N/A	N/A	SB042CP0*RBC
37	0.47	0.213	2,220	9,880	1,320	5,870	N/A	N/A	N/A	N/A	N/A	N/A	N/A	N/A	SC042CP0*RBC
28	0.83	0.376	3,190	14,190	2,270	10,100	N/A	N/A	N/A	N/A	N/A	N/A	N/A	N/A	SD042CP0*RBC
20	2.00	0.907	5,640	25,090	4,070	18,100	N/A	N/A	N/A	N/A	N/A	N/A	N/A	N/A	SF042CP0*RBC
15	3.80	1.724	8,210	36,520	6,700	29,800	N/A	N/A	N/A	N/A	N/A	N/A	N/A	N/A	SG042CP0*RBC
57	0.22	0.100	1,440	6,410	750	3,340	N/A	N/A	N/A	N/A	N/A	N/A	N/A	N/A	SA045CP0*RBC
48	0.33	0.150	1,950	8,670	1,060	4,720	N/A	N/A	N/A	N/A	N/A	N/A	N/A	N/A	SB045CP0*RBC
39	0.48	0.218	2,340	10,410	1,350	6,010	N/A	N/A	N/A	N/A	N/A	N/A	N/A	N/A	SC045CP0*RBC
30	0.88	0.399	3,420	15,210	2,350	10,450	N/A	N/A	N/A	N/A	N/A	N/A	N/A	N/A	SD045CP0*RBC
21	2.10	0.953	5,930	26,380	4,210	18,730	N/A	N/A	N/A	N/A	N/A	N/A	N/A	N/A	SF045CP0*RBC
16	4.00	1.814	8,760	38,970	7,000	31,140	N/A	N/A	N/A	N/A	N/A	N/A	N/A	N/A	SG045CP0*RBC
60	0.23	0.104	1,520	6,760	760	3,380	N/A	N/A	N/A	N/A	N/A	N/A	N/A	N/A	SA047CP0*RBC
50	0.34	0.154	2,030	9,030	1,070	4,760	N/A	N/A	N/A	N/A	N/A	N/A	N/A	N/A	SB047CP0*RBC
41	0.50	0.227	2,460	10,940	1,370	6,090	N/A	N/A	N/A	N/A	N/A	N/A	N/A	N/A	SC047CP0*RBC
31	0.94	0.426	3,530	15,700	2,360	10,500	N/A	N/A	N/A	N/A	N/A	N/A	N/A	N/A	SD047CP0*RBC
22	2.20	0.998	6,210	27,620	4,310	19,170	N/A	N/A	N/A	N/A	N/A	N/A	N/A	N/A	SF047CP0*RBC
17	4.10	1.860	9,300	41,370	7,290	32,430	N/A	N/A	N/A	N/A	N/A	N/A	N/A	N/A	SG047CP0*RBC
63	0.24	0.109	1,590	7,070	770	3,430	N/A	N/A	N/A	N/A	N/A	N/A	N/A	N/A	SA050CP0*RBC
53	0.38	0.172	2,150	9,560	1,100	4,890	N/A	N/A	N/A	N/A	N/A	N/A	N/A	N/A	SB050CP0*RBC
43	0.58	0.263	2,590	11,520	1,390	6,180	N/A	N/A	N/A	N/A	N/A	N/A	N/A	N/A	SC050CP0*RBC
33	1.00	0.454	3,760	16,730	2,430	10,810	N/A	N/A	N/A	N/A	N/A	N/A	N/A	N/A	SD050CP0*RBC
23	2.30	1.043	6,490	28,870	4,380	19,480	N/A	N/A	N/A	N/A	N/A	N/A	N/A	N/A	SF050CP0*RBC
18	4.30	1.950	9,850	43,810	7,570	33,670	N/A	N/A	N/A	N/A	N/A	N/A	N/A	N/A	SG050CP0*RBC
69	0.25	0.113	1,750	7,780	800	3,560	N/A	N/A	N/A	N/A	N/A	N/A	N/A	N/A	SA055CP0*RBC
58	0.41	0.186	2,360	10,500	1,130	5,030	N/A	N/A	N/A	N/A	N/A	N/A	N/A	N/A	SB055CP0*RBC
47	0.59	0.268	2,830	12,590	1,440	6,410	N/A	N/A	N/A	N/A	N/A	N/A	N/A	N/A	SC055CP0*RBC
36	1.06	0.481	4,100	18,240	2,510	11,170	N/A	N/A	N/A	N/A	N/A	N/A	N/A	N/A	SD055CP0*RBC
25	2.50	1.134	7,050	31,360	4,540	20,190	N/A	N/A	N/A	N/A	N/A	N/A	N/A	N/A	SF055CP0*RBC

Refer to the Engineering section for load and speed limitations.

RADIAL CONTACT, C-TYPE

THIN SECTION BALL BEARINGS

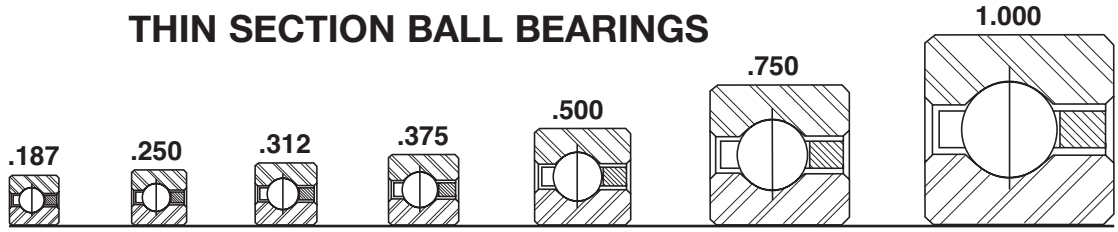

Series:	SAA	SA	SB	SC	SD	SF	SG
Cross Section Size:	3/16"	1/4"	5/16"	3/8"	1/2"	3/4"	1"

PART NUMBER*	NOMINAL DIMENSIONS												
	B Bore		D Outside Diameter		W Width		Land Diameter L_i -Inner Ring		Land Diameter L_o -Outer Ring		f_1 Housing Fillet		Ball Diameter
	in.	mm	in.	mm	in.	mm	in.	mm	in.	mm	in.	mm	in.
SG055CP0*RBC	5.5000	139.700	7.5000	190.500	1.0000	25.400	6.250	158.75	6.750	171.45	0.080	2.03	1/2
SA060CP0*RBC	6.0000	152.400	6.5000	165.100	0.2500	6.350	6.188	157.18	6.313	160.35	0.025	0.64	1/8
SB060CP0*RBC	6.0000	152.400	6.6250	168.275	0.3125	7.938	6.234	158.34	6.391	162.33	0.032	0.81	5/32
SC060CP0*RBC	6.0000	152.400	6.7500	171.450	0.3750	9.525	6.281	159.54	6.469	164.31	0.040	1.02	3/16
SD060CP0*RBC	6.0000	152.400	7.0000	177.800	0.5000	12.700	6.375	161.93	6.625	168.28	0.060	1.52	1/4
SF060CP0*RBC	6.0000	152.400	7.5000	190.500	0.7500	19.050	6.563	166.70	6.938	176.23	0.080	2.03	3/8
SG060CP0*RBC	6.0000	152.400	8.0000	203.200	1.0000	25.400	6.750	171.45	7.250	184.15	0.080	2.03	1/2
SA065CP0*RBC	6.5000	165.100	7.0000	177.800	0.2500	6.350	6.688	169.88	6.813	173.05	0.025	0.64	1/8
SB065CP0*RBC	6.5000	165.100	7.1250	180.975	0.3125	7.938	6.734	171.04	6.891	175.03	0.032	0.81	5/32
SC065CP0*RBC	6.5000	165.100	7.2500	184.150	0.3750	9.525	6.781	172.24	6.969	177.01	0.040	1.02	3/16
SD065CP0*RBC	6.5000	165.100	7.5000	190.500	0.5000	12.700	6.875	174.63	7.125	180.98	0.060	1.52	1/4
SF065CP0*RBC	6.5000	165.100	8.0000	203.200	0.7500	19.050	7.063	179.40	7.438	188.93	0.080	2.03	3/8
SG065CP0*RBC	6.5000	165.100	8.5000	215.900	1.0000	25.400	7.250	184.15	7.750	196.85	0.080	2.03	1/2
SA070CP0*RBC	7.0000	177.800	7.5000	190.500	0.2500	6.350	7.188	182.58	7.313	185.75	0.025	0.64	1/8
SB070CP0*RBC	7.0000	177.800	7.6250	193.675	0.3125	7.938	7.234	183.74	7.391	187.73	0.032	0.81	5/32
SC070CP0*RBC	7.0000	177.800	7.7500	196.850	0.3750	9.525	7.281	184.94	7.469	189.71	0.040	1.02	3/16
SD070CP0*RBC	7.0000	177.800	8.0000	203.200	0.5000	12.700	7.375	187.33	7.625	193.68	0.060	1.52	1/4
SF070CP0*RBC	7.0000	177.800	8.5000	215.900	0.7500	19.050	7.563	192.10	7.938	201.63	0.080	2.03	3/8
SG070CP0*RBC	7.0000	177.800	9.0000	228.600	1.0000	25.400	7.750	196.85	8.250	209.55	0.080	2.03	1/2
SA075CP0*RBC	7.5000	190.500	8.0000	203.200	0.2500	6.350	7.688	195.28	7.813	198.45	0.025	0.64	1/8
SB075CP0*RBC	7.5000	190.500	8.1250	206.375	0.3125	7.938	7.734	196.44	7.891	200.43	0.032	0.81	5/32
SC075CP0*RBC	7.5000	190.500	8.2500	209.550	0.3750	9.525	7.781	197.64	7.969	202.41	0.040	1.02	3/16
SD075CP0*RBC	7.5000	190.500	8.5000	215.900	0.5000	12.700	7.875	200.03	8.125	206.38	0.060	1.52	1/4
SF075CP0*RBC	7.5000	190.500	9.0000	228.600	0.7500	19.050	8.063	204.80	8.438	214.33	0.080	2.03	3/8
SG075CP0*RBC	7.5000	190.500	9.5000	241.300	1.0000	25.400	8.250	209.55	8.750	222.25	0.080	2.03	1/2
SA080CP0*RBC	8.0000	203.200	8.5000	215.900	0.2500	6.350	8.188	207.98	8.313	211.15	0.025	0.64	1/8
SB080CP0*RBC	8.0000	203.200	8.6250	219.075	0.3125	7.938	8.234	209.14	8.391	213.13	0.032	0.81	5/32
SC080CP0*RBC	8.0000	203.200	8.7500	222.250	0.3750	9.525	8.281	210.34	8.469	215.11	0.040	1.02	3/16
SD080CP0*RBC	8.0000	203.200	9.0000	228.600	0.5000	12.700	8.375	212.73	8.625	219.08	0.060	1.52	1/4
SF080CP0*RBC	8.0000	203.200	9.5000	241.300	0.7500	19.050	8.563	217.50	8.938	227.03	0.080	2.03	3/8
SG080CP0*RBC	8.0000	203.200	10.0000	254.000	1.0000	25.400	8.750	222.25	9.250	234.95	0.080	2.03	1/2
SA090CP0*RBC	9.0000	228.600	9.5000	241.300	0.2500	6.350	9.188	233.38	9.313	236.55	0.025	0.64	1/8
SB090CP0*RBC	9.0000	228.600	9.6250	244.475	0.3125	7.938	9.234	234.54	9.391	238.53	0.032	0.81	5/32
SC090CP0*RBC	9.0000	228.600	9.7500	247.650	0.3750	9.525	9.281	235.74	9.469	240.51	0.040	1.02	3/16
SD090CP0*RBC	9.0000	228.600	10.0000	254.000	0.5000	12.700	9.375	238.13	9.625	244.48	0.060	1.52	1/4
SF090CP0*RBC	9.0000	228.600	10.5000	266.700	0.7500	19.050	9.563	242.90	9.938	252.43	0.080	2.03	3/8
SG090CP0*RBC	9.0000	228.600	11.0000	279.400	1.0000	25.400	9.750	247.65	10.250	260.35	0.080	2.03	1/2
SA100CP0*RBC	10.0000	254.000	10.5000	266.700	0.2500	6.350	10.188	258.78	10.313	261.95	0.025	0.64	1/8
SB100CP0*RBC	10.0000	254.000	10.6250	269.875	0.3125	7.938	10.234	259.94	10.391	263.93	0.032	0.81	5/32
SC100CP0*RBC	10.0000	254.000	10.7500	273.050	0.3750	9.525	10.281	261.14	10.469	265.91	0.040	1.02	3/16
SD100CP0*RBC	10.0000	254.000	11.0000	279.400	0.5000	12.700	10.375	263.53	10.625	269.88	0.060	1.52	1/4
SF100CP0*RBC	10.0000	254.000	11.5000	292.100	0.7500	19.050	10.563	268.30	10.938	277.83	0.080	2.03	3/8
SG100CP0*RBC	10.0000	254.000	12.0000	304.800	1.0000	25.400	10.750	273.05	11.250	285.75	0.080	2.03	1/2

*The alphanumeric identification system is used under license.

- 440C Stainless Steel
- Large Diameter
- Light Weight
- Small Cross Section
- Snap-Over Ball Separator

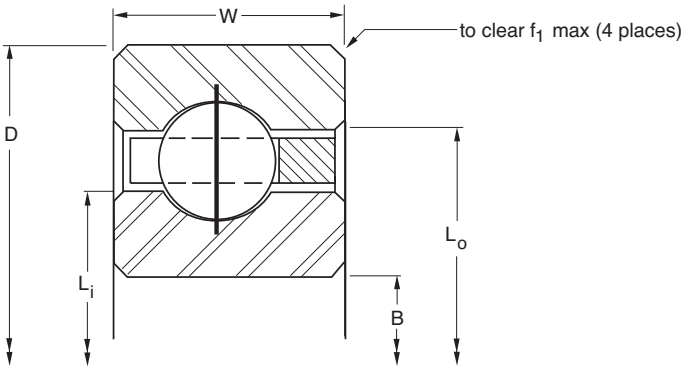

Ball Quantity	Approx. Weight		LOAD RATINGS												PART NUMBER*
			Radial				Thrust				Moment				
			Static		Dynamic		Static		Dynamic		Static		Dynamic		
	lbs.	kg	lbf	N	lbf	N	lbf	N	lbf	N	lbf - in	Nm	lbf - in	Nm	
19	4.70	2.132	10,400	46,260	7,850	34,920	N/A	N/A	N/A	N/A	N/A	N/A	N/A	N/A	SG055CP0*RBC
75	0.28	0.127	1,900	8,450	830	3,690	N/A	N/A	N/A	N/A	N/A	N/A	N/A	N/A	SA060CP0*RBC
63	0.44	0.200	2,560	11,390	1,170	5,200	N/A	N/A	N/A	N/A	N/A	N/A	N/A	N/A	SB060CP0*RBC
51	0.63	0.286	3,070	13,660	1,490	6,630	N/A	N/A	N/A	N/A	N/A	N/A	N/A	N/A	SC060CP0*RBC
39	1.16	0.526	4,450	19,790	2,580	11,480	N/A	N/A	N/A	N/A	N/A	N/A	N/A	N/A	SD060CP0*RBC
27	2.70	1.225	7,620	33,900	4,660	20,730	N/A	N/A	N/A	N/A	N/A	N/A	N/A	N/A	SF060CP0*RBC
21	5.10	2.313	11,490	51,110	8,390	37,320	N/A	N/A	N/A	N/A	N/A	N/A	N/A	N/A	SG060CP0*RBC
81	0.30	0.136	2,050	9,120	850	3,780	N/A	N/A	N/A	N/A	N/A	N/A	N/A	N/A	SA065CP0*RBC
68	0.47	0.213	2,760	12,280	1,200	5,340	N/A	N/A	N/A	N/A	N/A	N/A	N/A	N/A	SB065CP0*RBC
55	0.68	0.308	3,310	14,720	1,530	6,810	N/A	N/A	N/A	N/A	N/A	N/A	N/A	N/A	SC065CP0*RBC
42	1.22	0.553	4,790	21,310	2,650	11,790	N/A	N/A	N/A	N/A	N/A	N/A	N/A	N/A	SD065CP0*RBC
29	2.90	1.315	8,180	36,390	4,790	21,310	N/A	N/A	N/A	N/A	N/A	N/A	N/A	N/A	SF065CP0*RBC
22	5.40	2.449	12,040	53,560	8,520	37,900	N/A	N/A	N/A	N/A	N/A	N/A	N/A	N/A	SG065CP0*RBC
87	0.31	0.141	2,200	9,790	870	3,870	N/A	N/A	N/A	N/A	N/A	N/A	N/A	N/A	SA070CP0*RBC
73	0.50	0.227	2,970	13,210	1,240	5,520	N/A	N/A	N/A	N/A	N/A	N/A	N/A	N/A	SB070CP0*RBC
59	0.73	0.331	3,550	15,790	1,570	6,980	N/A	N/A	N/A	N/A	N/A	N/A	N/A	N/A	SC070CP0*RBC
45	1.31	0.594	5,130	22,820	2,730	12,140	N/A	N/A	N/A	N/A	N/A	N/A	N/A	N/A	SD070CP0*RBC
31	3.20	1.451	8,750	38,920	4,920	21,890	N/A	N/A	N/A	N/A	N/A	N/A	N/A	N/A	SF070CP0*RBC
24	5.80	2.631	13,130	58,410	8,880	39,500	N/A	N/A	N/A	N/A	N/A	N/A	N/A	N/A	SG070CP0*RBC
93	0.34	0.154	2,350	10,450	890	3,960	N/A	N/A	N/A	N/A	N/A	N/A	N/A	N/A	SA075CP0*RBC
78	0.53	0.240	3,170	14,100	1,280	5,690	N/A	N/A	N/A	N/A	N/A	N/A	N/A	N/A	SB075CP0*RBC
63	0.78	0.354	3,790	16,860	1,600	7,120	N/A	N/A	N/A	N/A	N/A	N/A	N/A	N/A	SC075CP0*RBC
48	1.41	0.640	5,470	24,330	2,800	12,460	N/A	N/A	N/A	N/A	N/A	N/A	N/A	N/A	SD075CP0*RBC
33	3.40	1.542	9,310	41,410	5,040	22,420	N/A	N/A	N/A	N/A	N/A	N/A	N/A	N/A	SF075CP0*RBC
25	6.10	2.767	13,680	60,850	8,960	39,860	N/A	N/A	N/A	N/A	N/A	N/A	N/A	N/A	SG075CP0*RBC
99	0.38	0.172	2,500	11,120	910	4,050	N/A	N/A	N/A	N/A	N/A	N/A	N/A	N/A	SA080CP0*RBC
83	0.57	0.259	3,370	14,990	1,280	5,690	N/A	N/A	N/A	N/A	N/A	N/A	N/A	N/A	SB080CP0*RBC
67	0.84	0.381	4,030	17,930	1,650	7,340	N/A	N/A	N/A	N/A	N/A	N/A	N/A	N/A	SC080CP0*RBC
51	1.53	0.694	5,810	25,840	2,860	12,720	N/A	N/A	N/A	N/A	N/A	N/A	N/A	N/A	SD080CP0*RBC
35	3.50	1.588	9,880	43,950	5,140	22,860	N/A	N/A	N/A	N/A	N/A	N/A	N/A	N/A	SF080CP0*RBC
27	6.50	2.948	14,770	65,700	9,300	41,370	N/A	N/A	N/A	N/A	N/A	N/A	N/A	N/A	SG080CP0*RBC
111	0.44	0.200	2,810	12,500	940	4,180	N/A	N/A	N/A	N/A	N/A	N/A	N/A	N/A	SA090CP0*RBC
93	0.66	0.299	3,780	16,810	1,330	5,920	N/A	N/A	N/A	N/A	N/A	N/A	N/A	N/A	SB090CP0*RBC
75	0.94	0.426	4,510	20,060	1,730	7,700	N/A	N/A	N/A	N/A	N/A	N/A	N/A	N/A	SC090CP0*RBC
57	1.72	0.780	6,500	28,910	2,970	13,210	N/A	N/A	N/A	N/A	N/A	N/A	N/A	N/A	SD090CP0*RBC
39	3.90	1.769	11,000	48,930	5,360	23,840	N/A	N/A	N/A	N/A	N/A	N/A	N/A	N/A	SF090CP0*RBC
30	7.20	3.266	16,420	73,040	9,720	43,240	N/A	N/A	N/A	N/A	N/A	N/A	N/A	N/A	SG090CP0*RBC
123	0.50	0.227	3,110	13,830	990	4,400	N/A	N/A	N/A	N/A	N/A	N/A	N/A	N/A	SA100CP0*RBC
103	0.73	0.331	4,190	18,640	1,400	6,230	N/A	N/A	N/A	N/A	N/A	N/A	N/A	N/A	SB100CP0*RBC
83	1.06	0.481	4,990	22,200	1,781	7,920	N/A	N/A	N/A	N/A	N/A	N/A	N/A	N/A	SC100CP0*RBC
63	1.88	0.853	7,180	31,940	3,070	13,660	N/A	N/A	N/A	N/A	N/A	N/A	N/A	N/A	SD100CP0*RBC
43	4.30	1.950	12,130	53,960	5,550	24,690	N/A	N/A	N/A	N/A	N/A	N/A	N/A	N/A	SF100CP0*RBC
33	7.90	3.583	18,060	80,330	10,040	44,660	N/A	N/A	N/A	N/A	N/A	N/A	N/A	N/A	SG100CP0*RBC

Refer to the Engineering section for load and speed limitations.

RADIAL CONTACT, C-TYPE

THIN SECTION BALL BEARINGS

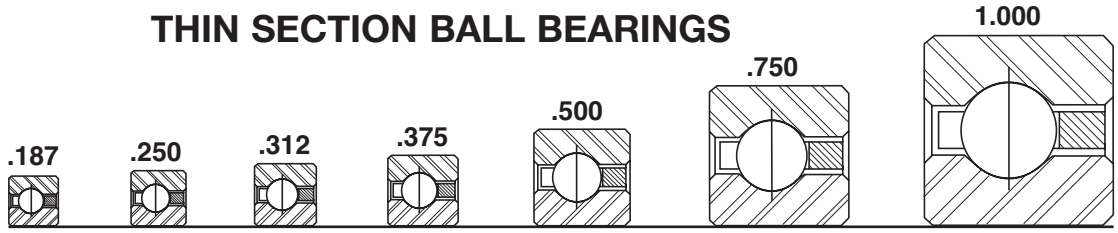

Series:	SAA	SA	SB	SC	SD	SF	SG
Cross Section Size:	3/16"	1/4"	5/16"	3/8"	1/2"	3/4"	1"

PART NUMBER*	NOMINAL DIMENSIONS												
	B Bore		D Outside Diameter		W Width		Land Diameter L_i -Inner Ring		Land Diameter L_o -Outer Ring		f_1 Housing Fillet		Ball Diameter
	in.	mm	in.	mm	in.	mm	in.	mm	in.	mm	in.	mm	in.
SA110CP0*RBC	11.0000	279.400	11.5000	292.100	0.2500	6.350	11.188	284.18	11.313	287.35	0.025	0.64	1/8
SB110CP0*RBC	11.0000	279.400	11.6250	295.275	0.3125	7.938	11.234	285.34	11.391	289.33	0.032	0.81	5/32
SC110CP0*RBC	11.0000	279.400	11.7500	298.450	0.3750	9.525	11.281	286.54	11.469	291.31	0.040	1.02	3/16
SD110CP0*RBC	11.0000	279.400	12.0000	304.800	0.5000	12.700	11.375	288.93	11.625	295.28	0.060	1.52	1/4
SF110CP0*RBC	11.0000	279.400	12.5000	317.500	0.7500	19.050	11.563	293.70	11.938	303.23	0.080	2.03	3/8
SG110CP0*RBC	11.0000	279.400	13.0000	330.200	1.0000	25.400	11.750	298.45	12.250	311.15	0.080	2.03	1/2
SA120CP0*RBC	12.0000	304.800	12.5000	317.500	0.2500	6.350	12.188	309.58	12.313	312.75	0.025	0.64	1/8
SB120CP0*RBC	12.0000	304.800	12.6250	320.675	0.3125	7.938	12.234	310.74	12.391	314.73	0.032	0.81	5/32
SC120CP0*RBC	12.0000	304.800	12.7500	323.850	0.3750	9.525	12.281	311.94	12.469	316.71	0.040	1.02	3/16
SD120CP0*RBC	12.0000	304.800	13.0000	330.200	0.5000	12.700	12.375	314.33	12.625	320.68	0.060	1.52	1/4
SF120CP0*RBC	12.0000	304.800	13.5000	342.900	0.7500	19.050	12.563	319.10	12.938	328.63	0.080	2.03	3/8
SG120CP0*RBC	12.0000	304.800	14.0000	355.600	1.0000	25.400	12.750	323.85	13.250	336.55	0.080	2.03	1/2
SB140CP0*RBC	14.0000	355.600	14.6250	371.475	0.3125	7.938	14.234	361.54	14.391	365.53	0.032	0.81	5/32
SC140CP0*RBC	14.0000	355.600	14.7500	374.650	0.3750	9.525	14.281	362.74	14.469	367.51	0.040	1.02	3/16
SD140CP0*RBC	14.0000	355.600	15.0000	381.000	0.5000	12.700	14.375	365.13	14.625	371.48	0.060	1.52	1/4
SF140CP0*RBC	14.0000	355.600	15.5000	393.700	0.7500	19.050	14.563	369.90	14.938	379.43	0.080	2.03	3/8
SG140CP0*RBC	14.0000	355.600	16.0000	406.400	1.0000	25.400	14.750	374.65	15.250	387.35	0.080	2.03	1/2
SB160CP0*RBC	16.0000	406.400	16.6250	422.275	0.3125	7.938	16.234	412.34	16.391	416.33	0.032	0.81	5/32
SC160CP0*RBC	16.0000	406.400	16.7500	425.450	0.3750	9.525	16.281	413.54	16.469	418.31	0.040	1.02	3/16
SD160CP0*RBC	16.0000	406.400	17.0000	431.800	0.5000	12.700	16.375	415.93	16.625	422.28	0.060	1.52	1/4
SF160CP0*RBC	16.0000	406.400	17.5000	444.500	0.7500	19.050	16.563	420.70	16.938	430.23	0.080	2.03	3/8
SG160CP0*RBC	16.0000	406.400	18.0000	457.200	1.0000	25.400	16.750	425.45	17.250	438.15	0.080	2.03	1/2
SB180CP0*RBC	18.0000	457.200	18.6250	473.075	0.3125	7.938	18.234	463.14	18.391	467.13	0.032	0.81	5/32
SC180CP0*RBC	18.0000	457.200	18.7500	476.250	0.3750	9.525	18.281	464.34	18.469	469.11	0.040	1.02	3/16
SD180CP0*RBC	18.0000	457.200	19.0000	482.600	0.5000	12.700	18.375	466.73	18.625	473.08	0.060	1.52	1/4
SF180CP0*RBC	18.0000	457.200	19.5000	495.300	0.7500	19.050	18.563	471.50	18.938	481.03	0.080	2.03	3/8
SG180CP0*RBC	18.0000	457.200	20.0000	508.000	1.0000	25.400	18.750	476.25	19.250	488.95	0.080	2.03	1/2
SB200CP0*RBC	20.0000	508.000	20.6250	523.875	0.3125	7.938	20.234	513.94	20.391	517.93	0.032	0.81	5/32
SC200CP0*RBC	20.0000	508.000	20.7500	527.050	0.3750	9.525	20.281	515.14	20.469	519.91	0.040	1.02	3/16
SD200CP0*RBC	20.0000	508.000	21.0000	533.400	0.5000	12.700	20.375	517.53	20.625	523.88	0.060	1.52	1/4
SF200CP0*RBC	20.0000	508.000	21.5000	546.100	0.7500	19.050	20.563	522.30	20.938	531.83	0.080	2.03	3/8
SG200CP0*RBC	20.0000	508.000	22.0000	558.800	1.0000	25.400	20.750	527.05	21.250	539.75	0.080	2.03	1/2
SC250CP0*RBC	25.0000	635.000	25.7500	654.050	0.3750	9.525	25.281	642.14	25.469	646.91	0.040	1.02	3/16
SD250CP0*RBC	25.0000	635.000	26.0000	660.400	0.5000	12.700	25.375	644.53	25.625	650.88	0.060	1.52	1/4
SF250CP0*RBC	25.0000	635.000	26.5000	673.100	0.7500	19.050	25.563	649.30	25.938	658.83	0.080	2.03	3/8
SG250CP0*RBC	25.0000	635.000	27.0000	685.800	1.0000	25.400	25.750	654.05	26.250	666.75	0.080	2.03	1/2
SC300CP0*RBC	30.0000	762.000	30.7500	781.050	0.3750	9.525	30.281	769.14	30.469	773.91	0.040	1.02	3/16
SD300CP0*RBC	30.0000	762.000	31.0000	787.400	0.5000	12.700	30.375	771.53	30.625	777.88	0.060	1.52	1/4
SF300CP0*RBC	30.0000	762.000	31.5000	800.100	0.7500	19.050	30.563	776.30	30.938	785.83	0.080	2.03	3/8
SG300CP0*RBC	30.0000	762.000	32.0000	812.800	1.0000	25.400	30.750	781.05	31.250	793.75	0.080	2.03	1/2
SF350CP0*RBC	35.0000	889.000	36.5000	927.100	0.7500	19.050	35.563	903.30	35.938	912.83	0.080	2.03	3/8
SG350CP0*RBC	35.0000	889.000	37.0000	939.800	1.0000	25.400	35.750	908.05	36.250	920.75	0.080	2.03	1/2
SF400CP0*RBC	40.0000	1016.000	41.5000	1054.100	0.7500	19.050	40.563	1030.30	40.938	1039.83	0.080	2.03	3/8
SG400CP0*RBC	40.0000	1016.000	42.0000	1066.800	1.0000	25.400	40.750	1035.05	41.250	1047.75	0.080	2.03	1/2

*The alphanumeric identification system is used under license.

- 440C Stainless Steel
- Large Diameter
- Light Weight
- Small Cross Section
- Snap-Over Ball Separator

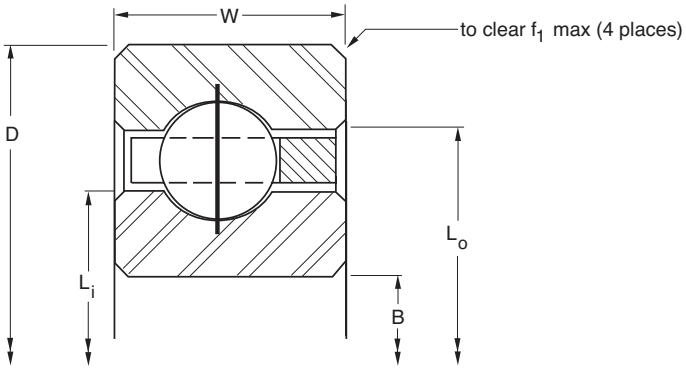

Ball Quantity	Approx. Weight		LOAD RATINGS												PART NUMBER*
			Radial				Thrust				Moment				
			Static		Dynamic		Static		Dynamic		Static		Dynamic		
	lbs.	kg	lbf	N	lbf	N	lbf	N	lbf	N	lbf - in	Nm	lbf - in	Nm	
135	0.52	0.236	3,410	15,170	1,030	4,580	N/A	N/A	N/A	N/A	N/A	N/A	N/A	N/A	SA110CP0*RBC
113	0.75	0.340	4,590	20,420	1,464	6,510	N/A	N/A	N/A	N/A	N/A	N/A	N/A	N/A	SB110CP0*RBC
91	1.16	0.526	5,470	24,330	1,879	8,360	N/A	N/A	N/A	N/A	N/A	N/A	N/A	N/A	SC110CP0*RBC
69	2.06	0.934	7,870	35,010	3,180	14,150	N/A	N/A	N/A	N/A	N/A	N/A	N/A	N/A	SD110CP0*RBC
47	4.80	2.177	13,260	58,980	5,833	25,950	N/A	N/A	N/A	N/A	N/A	N/A	N/A	N/A	SF110CP0*RBC
36	8.60	3.901	19,700	87,630	10,360	46,080	N/A	N/A	N/A	N/A	N/A	N/A	N/A	N/A	SG110CP0*RBC
147	0.56	0.254	3,720	16,550	1,078	4,800	N/A	N/A	N/A	N/A	N/A	N/A	N/A	N/A	SA120CP0*RBC
123	0.83	0.376	5,000	22,240	1,539	6,850	N/A	N/A	N/A	N/A	N/A	N/A	N/A	N/A	SB120CP0*RBC
99	1.25	0.567	5,950	26,470	1,974	8,780	N/A	N/A	N/A	N/A	N/A	N/A	N/A	N/A	SC120CP0*RBC
75	2.25	1.021	8,550	38,030	3,320	14,770	N/A	N/A	N/A	N/A	N/A	N/A	N/A	N/A	SD120CP0*RBC
51	5.20	2.359	14,390	64,010	6,105	27,160	N/A	N/A	N/A	N/A	N/A	N/A	N/A	N/A	SF120CP0*RBC
39	9.30	4.218	21,340	94,930	10,690	47,550	N/A	N/A	N/A	N/A	N/A	N/A	N/A	N/A	SG120CP0*RBC
143	1.05	0.476	5,810	25,840	1,680	7,470	N/A	N/A	N/A	N/A	N/A	N/A	N/A	N/A	SB140CP0*RBC
115	1.52	0.689	6,910	30,740	2,154	9,580	N/A	N/A	N/A	N/A	N/A	N/A	N/A	N/A	SC140CP0*RBC
87	2.73	1.238	9,920	44,130	3,460	15,390	N/A	N/A	N/A	N/A	N/A	N/A	N/A	N/A	SD140CP0*RBC
59	6.00	2.722	16,650	74,060	6,620	29,450	N/A	N/A	N/A	N/A	N/A	N/A	N/A	N/A	SF140CP0*RBC
45	10.80	4.899	24,620	109,520	11,280	50,180	N/A	N/A	N/A	N/A	N/A	N/A	N/A	N/A	SG140CP0*RBC
163	1.20	0.544	6,620	29,450	1,812	8,060	N/A	N/A	N/A	N/A	N/A	N/A	N/A	N/A	SB160CP0*RBC
131	1.73	0.785	7,880	35,050	2,321	10,320	N/A	N/A	N/A	N/A	N/A	N/A	N/A	N/A	SC160CP0*RBC
99	3.10	1.406	11,290	50,220	3,688	16,410	N/A	N/A	N/A	N/A	N/A	N/A	N/A	N/A	SD160CP0*RBC
67	7.10	3.221	18,900	84,070	7,104	31,600	N/A	N/A	N/A	N/A	N/A	N/A	N/A	N/A	SF160CP0*RBC
51	12.30	5.579	27,910	124,150	11,820	52,580	N/A	N/A	N/A	N/A	N/A	N/A	N/A	N/A	SG160CP0*RBC
183	1.35	0.612	7,440	33,090	1,936	8,610	N/A	N/A	N/A	N/A	N/A	N/A	N/A	N/A	SB180CP0*RBC
147	1.94	0.880	8,840	39,320	2,478	11,020	N/A	N/A	N/A	N/A	N/A	N/A	N/A	N/A	SC180CP0*RBC
111	3.48	1.579	12,650	56,270	3,933	17,490	N/A	N/A	N/A	N/A	N/A	N/A	N/A	N/A	SD180CP0*RBC
75	7.90	3.583	21,160	94,120	7,557	33,620	N/A	N/A	N/A	N/A	N/A	N/A	N/A	N/A	SF180CP0*RBC
57	13.70	6.214	31,190	138,740	12,367	55,010	N/A	N/A	N/A	N/A	N/A	N/A	N/A	N/A	SG180CP0*RBC
203	1.50	0.680	8,250	36,700	2,053	9,130	N/A	N/A	N/A	N/A	N/A	N/A	N/A	N/A	SB200CP0*RBC
163	2.16	0.980	9,800	43,590	2,626	11,680	N/A	N/A	N/A	N/A	N/A	N/A	N/A	N/A	SC200CP0*RBC
123	3.85	1.746	14,020	62,360	4,164	18,520	N/A	N/A	N/A	N/A	N/A	N/A	N/A	N/A	SD200CP0*RBC
83	8.90	4.037	23,420	104,180	7,986	35,520	N/A	N/A	N/A	N/A	N/A	N/A	N/A	N/A	SF200CP0*RBC
63	15.80	7.167	34,470	153,330	13,044	58,020	N/A	N/A	N/A	N/A	N/A	N/A	N/A	N/A	SG200CP0*RBC
203	2.69	1.220	12,200	54,270	2,962	13,180	N/A	N/A	N/A	N/A	N/A	N/A	N/A	N/A	SC250CP0*RBC
153	4.79	2.173	17,440	77,580	4,689	20,860	N/A	N/A	N/A	N/A	N/A	N/A	N/A	N/A	SD250CP0*RBC
103	10.90	4.944	29,060	129,270	8,963	39,870	N/A	N/A	N/A	N/A	N/A	N/A	N/A	N/A	SF250CP0*RBC
78	19.50	8.845	42,680	189,850	14,591	64,900	N/A	N/A	N/A	N/A	N/A	N/A	N/A	N/A	SG250CP0*RBC
243	3.21	1.456	14,610	64,990	3,260	14,500	N/A	N/A	N/A	N/A	N/A	N/A	N/A	N/A	SC300CP0*RBC
183	5.73	2.599	20,860	92,790	5,153	22,920	N/A	N/A	N/A	N/A	N/A	N/A	N/A	N/A	SD300CP0*RBC
123	13.00	5.897	34,700	154,350	9,828	43,720	N/A	N/A	N/A	N/A	N/A	N/A	N/A	N/A	SF300CP0*RBC
93	23.30	10.569	50,890	226,370	15,963	71,010	N/A	N/A	N/A	N/A	N/A	N/A	N/A	N/A	SG300CP0*RBC
143	15.10	6.849	40,350	179,490	10,603	47,160	N/A	N/A	N/A	N/A	N/A	N/A	N/A	N/A	SF350CP0*RBC
108	27.10	12.292	59,100	262,890	17,195	76,490	N/A	N/A	N/A	N/A	N/A	N/A	N/A	N/A	SG350CP0*RBC
163	17.20	7.802	45,990	204,570	11,302	50,270	N/A	N/A	N/A	N/A	N/A	N/A	N/A	N/A	SF400CP0*RBC
123	30.80	13.971	67,310	299,410	18,307	81,430	N/A	N/A	N/A	N/A	N/A	N/A	N/A	N/A	SG400CP0*RBC

Refer to the Engineering section for load and speed limitations.

ANGULAR CONTACT, A-TYPE

THIN SECTION BALL BEARINGS

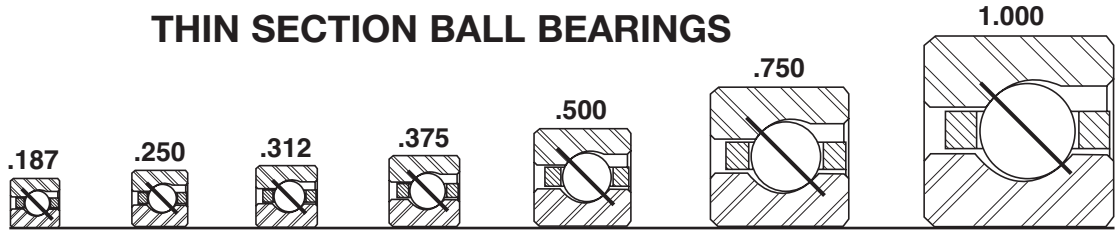

Series:	SAA	SA	SB	SC	SD	SF	SG
Cross Section Size:	3/16"	1/4"	5/16"	3/8"	1/2"	3/4"	1"

PART NUMBER*	NOMINAL DIMENSIONS														
	B Bore		D Outside Diameter		W Width		Land Diameter						f_1 Housing Fillet		Ball Diameter
							L_i -Inner Ring		L_o -Outer Ring		L_s -Counter Bore				
	in.	mm	in.	mm	in.	mm	in.	mm	in.	mm	in.	mm	in.	mm	in.
SAA10AG0*RBC	1.0000	25.400	1.3750	34.925	0.1875	4.763	1.141	28.98	1.234	31.34	1.235	31.37	0.015	0.38	3/32
SAA15AG0*RBC	1.5000	38.100	1.8750	47.625	0.1875	4.763	1.641	41.68	1.734	44.04	1.735	44.07	0.015	0.38	3/32
SAA17AG0*RBC	1.7500	44.450	2.1250	53.975	0.1875	4.763	1.890	48.01	1.985	50.42	2.024	51.41	0.015	0.38	3/32
SA020AR0*RBC	2.0000	50.800	2.5000	63.500	0.2500	6.350	2.188	55.58	2.313	58.75	2.375	60.33	0.025	0.64	1/8
SB020AR0*RBC	2.0000	50.800	2.6250	66.675	0.3125	7.938	2.234	56.74	2.391	60.73	2.469	62.71	0.032	0.81	5/32
SA025AR0*RBC	2.5000	63.500	3.0000	76.200	0.2500	6.350	2.688	68.28	2.813	71.45	2.875	73.03	0.025	0.64	1/8
SB025AR0*RBC	2.5000	63.500	3.1250	79.375	0.3125	7.938	2.734	69.44	2.891	73.43	2.969	75.41	0.032	0.81	5/32
SA030AR0*RBC	3.0000	76.200	3.5000	88.900	0.2500	6.350	3.188	80.98	3.313	84.15	3.375	85.73	0.025	0.64	1/8
SB030AR0*RBC	3.0000	76.200	3.6250	92.075	0.3125	7.938	3.234	82.14	3.391	86.13	3.469	88.11	0.032	0.81	5/32
SA035AR0*RBC	3.5000	88.900	4.0000	101.600	0.2500	6.350	3.688	93.68	3.813	96.85	3.875	98.43	0.025	0.64	1/8
SB035AR0*RBC	3.5000	88.900	4.1250	104.775	0.3125	7.938	3.734	94.84	3.891	98.83	3.969	100.81	0.032	0.81	5/32
SA040AR0*RBC	4.0000	101.600	4.5000	114.300	0.2500	6.350	4.188	106.38	4.313	109.55	4.375	111.13	0.025	0.64	1/8
SB040AR0*RBC	4.0000	101.600	4.6250	117.475	0.3125	7.938	4.234	107.54	4.391	111.53	4.469	113.51	0.032	0.81	5/32
SC040AR0*RBC	4.0000	101.600	4.7500	120.650	0.3750	9.525	4.281	108.74	4.469	113.51	4.563	115.90	0.040	1.02	3/16
SD040AR0*RBC	4.0000	101.600	5.0000	127.000	0.5000	12.700	4.375	111.13	4.625	117.48	4.750	120.65	0.060	1.52	1/4
SF040AR0*RBC	4.0000	101.600	5.5000	139.700	0.7500	19.050	4.563	115.90	4.938	125.43	5.125	130.18	0.080	2.03	3/8
SG040AR0*RBC	4.0000	101.600	6.0000	152.400	1.0000	25.400	4.750	120.65	5.250	133.35	5.500	139.70	0.080	2.03	1/2
SA042AR0*RBC	4.2500	107.950	4.7500	120.650	0.2500	6.350	4.438	112.73	4.563	115.90	4.625	117.48	0.025	0.64	1/8
SB042AR0*RBC	4.2500	107.950	4.8750	123.825	0.3125	7.938	4.484	113.89	4.641	117.88	4.719	119.86	0.032	0.81	5/32
SC042AR0*RBC	4.2500	107.950	5.0000	127.000	0.3750	9.525	4.531	115.09	4.719	119.86	4.813	122.25	0.040	1.02	3/16
SD042AR0*RBC	4.2500	107.950	5.2500	133.350	0.5000	12.700	4.625	117.48	4.875	123.83	5.000	127.00	0.060	1.52	1/4
SF042AR0*RBC	4.2500	107.950	5.7500	146.050	0.7500	19.050	4.813	122.25	5.188	131.78	5.375	136.53	0.080	2.03	3/8
SG042AR0*RBC	4.2500	107.950	6.2500	158.750	1.0000	25.400	5.000	127.00	5.500	139.70	5.750	146.05	0.080	2.03	1/2
SA045AR0*RBC	4.5000	114.300	5.0000	127.000	0.2500	6.350	4.688	119.08	4.813	122.25	4.875	123.83	0.025	0.64	1/8
SB045AR0*RBC	4.5000	114.300	5.1250	130.175	0.3125	7.938	4.734	120.24	4.891	124.23	4.969	126.21	0.032	0.81	5/32
SC045AR0*RBC	4.5000	114.300	5.2500	133.350	0.3750	9.525	4.781	121.44	4.969	126.21	5.063	128.60	0.040	1.02	3/16
SD045AR0*RBC	4.5000	114.300	5.5000	139.700	0.5000	12.700	4.875	123.83	5.125	130.18	5.250	133.35	0.060	1.52	1/4
SF045AR0*RBC	4.5000	114.300	6.0000	152.400	0.7500	19.050	5.063	128.60	5.438	138.13	5.625	142.88	0.080	2.03	3/8
SG045AR0*RBC	4.5000	114.300	6.5000	165.100	1.0000	25.400	5.250	133.35	5.750	146.05	6.000	152.40	0.080	2.03	1/2
SA047AR0*RBC	4.7500	120.650	5.2500	133.350	0.2500	6.350	4.938	125.43	5.063	128.60	5.125	130.18	0.025	0.64	1/8
SB047AR0*RBC	4.7500	120.650	5.3750	136.525	0.3125	7.938	4.984	126.59	5.141	130.58	5.219	132.56	0.032	0.81	5/32
SC047AR0*RBC	4.7500	120.650	5.5000	139.700	0.3750	9.525	5.031	127.79	5.219	132.56	5.313	134.95	0.040	1.02	3/16
SD047AR0*RBC	4.7500	120.650	5.7500	146.050	0.5000	12.700	5.125	130.18	5.375	136.53	5.500	139.70	0.060	1.52	1/4
SF047AR0*RBC	4.7500	120.650	6.2500	158.750	0.7500	19.050	5.313	134.95	5.688	144.48	5.875	149.23	0.080	2.03	3/8
SG047AR0*RBC	4.7500	120.650	6.7500	171.450	1.0000	25.400	5.500	139.70	6.000	152.40	6.250	158.75	0.080	2.03	1/2
SA050AR0*RBC	5.0000	127.000	5.5000	139.700	0.2500	6.350	5.188	131.78	5.313	134.95	5.375	136.53	0.025	0.64	1/8
SB050AR0*RBC	5.0000	127.000	5.6250	142.875	0.3125	7.938	5.234	132.94	5.391	136.93	5.469	138.91	0.032	0.81	5/32
SC050AR0*RBC	5.0000	127.000	5.7500	146.050	0.3750	9.525	5.281	134.14	5.469	138.91	5.563	141.30	0.040	1.02	3/16
SD050AR0*RBC	5.0000	127.000	6.0000	152.400	0.5000	12.700	5.375	136.53	5.625	142.88	5.750	146.05	0.060	1.52	1/4
SF050AR0*RBC	5.0000	127.000	6.5000	165.100	0.7500	19.050	5.563	141.30	5.938	150.83	6.125	155.58	0.080	2.03	3/8
SG050AR0*RBC	5.0000	127.000	7.0000	177.800	1.0000	25.400	5.750	146.05	6.250	158.75	6.500	165.10	0.080	2.03	1/2
SA055AR0*RBC	5.5000	139.700	6.0000	152.400	0.2500	6.350	5.688	144.48	5.813	147.65	5.875	149.23	0.025	0.64	1/8
SB055AR0*RBC	5.5000	139.700	6.1250	155.575	0.3125	7.938	5.734	145.64	5.891	149.63	5.969	151.61	0.032	0.81	5/32
SC055AR0*RBC	5.5000	139.700	6.2500	158.750	0.3750	9.525	5.781	146.84	5.969	151.61	6.063	154.00	0.040	1.02	3/16
SD055AR0*RBC	5.5000	139.700	6.5000	165.100	0.5000	12.700	5.875	149.23	6.125	155.58	6.250	158.75	0.060	1.52	1/4
SF055AR0*RBC	5.5000	139.700	7.0000	177.800	0.7500	19.050	6.063	154.00	6.438	163.53	6.625	168.28	0.080	2.03	3/8

*The alphanumeric identification system is used under license.

- 440C Stainless Steel
- Large Diameter
- Light Weight
- Small Cross Section
- Circular Pocket Ball Separator

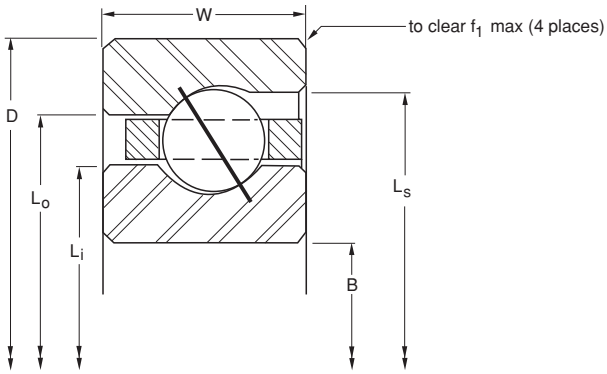

Ball Quantity	Approx. Weight		LOAD RATINGS												PART NUMBER*
			Radial				Thrust				Moment				
			Static		Dynamic		Static		Dynamic		Static		Dynamic		
	lbs.	kg	lbf	N	lbf	N	lbf	N	lbf	N	lbf - in	Nm	lbf - in	Nm	
28	0.03	0.014	340	1,510	330	1,470	970	4,310	960	4,270	N/A	N/A	N/A	N/A	SAA10AG0*RBC
40	0.04	0.018	480	2,140	380	1,690	1,380	6,140	1,100	4,890	N/A	N/A	N/A	N/A	SAA15AG0*RBC
44	0.06	0.027	530	2,360	390	1,730	1,520	6,760	1,122	4,990	N/A	N/A	N/A	N/A	SAA17AG0*RBC
36	0.10	0.045	790	3,510	600	2,670	2,280	10,140	1,730	7,700	N/A	N/A	N/A	N/A	SA020AR0*RBC
31	0.16	0.073	1,090	4,850	850	3,780	3,150	14,010	2,460	10,940	N/A	N/A	N/A	N/A	SB020AR0*RBC
44	0.13	0.059	960	4,270	640	2,850	2,780	12,370	1,860	8,270	N/A	N/A	N/A	N/A	SA025AR0*RBC
38	0.20	0.091	1,340	5,960	920	4,090	3,860	17,170	2,680	11,920	N/A	N/A	N/A	N/A	SB025AR0*RBC
52	0.15	0.068	1,140	5,070	680	3,020	3,290	14,630	1,980	8,810	N/A	N/A	N/A	N/A	SA030AR0*RBC
44	0.24	0.109	1,550	6,890	970	4,310	4,470	19,880	2,800	12,460	N/A	N/A	N/A	N/A	SB030AR0*RBC
60	0.18	0.082	1,310	5,830	720	3,200	3,790	16,860	2,070	9,210	N/A	N/A	N/A	N/A	SA035AR0*RBC
51	0.27	0.122	1,790	7,960	1,020	4,540	5,180	23,040	2,970	13,210	N/A	N/A	N/A	N/A	SB035AR0*RBC
68	0.19	0.086	1,490	6,630	750	3,340	4,300	19,130	2,180	9,700	N/A	N/A	N/A	N/A	SA040AR0*RBC
58	0.30	0.136	2,040	9,070	1,080	4,800	5,890	26,200	3,130	13,920	N/A	N/A	N/A	N/A	SB040AR0*RBC
49	0.45	0.204	2,550	11,340	1,410	6,270	7,360	32,740	4,080	18,150	N/A	N/A	N/A	N/A	SC040AR0*RBC
36	0.78	0.354	3,550	15,790	2,373	10,560	10,260	45,640	6,020	26,780	N/A	N/A	N/A	N/A	SD040AR0*RBC
26	1.90	0.862	6,350	28,250	4,350	19,350	18,340	81,580	12,620	56,140	N/A	N/A	N/A	N/A	SF040AR0*RBC
20	3.60	1.633	9,480	42,170	7,340	32,650	27,360	121,700	21,290	94,700	N/A	N/A	N/A	N/A	SG040AR0*RBC
72	0.20	0.091	1,580	7,030	770	3,430	4,550	20,240	2,240	9,960	N/A	N/A	N/A	N/A	SA042AR0*RBC
61	0.31	0.141	2,150	9,560	1,090	4,850	6,200	27,580	3,170	14,100	N/A	N/A	N/A	N/A	SB042AR0*RBC
52	0.47	0.213	2,710	12,050	1,440	6,410	7,820	34,790	4,180	18,590	N/A	N/A	N/A	N/A	SC042AR0*RBC
38	0.83	0.376	3,750	16,680	2,410	10,720	10,830	48,170	6,990	31,090	N/A	N/A	N/A	N/A	SD042AR0*RBC
27	2.00	0.907	6,600	29,360	4,390	19,530	19,050	84,740	12,740	56,670	N/A	N/A	N/A	N/A	SF042AR0*RBC
21	3.80	1.724	9,950	44,260	7,580	33,720	28,730	127,800	21,990	97,820	N/A	N/A	N/A	N/A	SG042AR0*RBC
76	0.22	0.100	1,660	7,380	780	3,470	4,810	21,400	2,260	10,050	N/A	N/A	N/A	N/A	SA045AR0*RBC
64	0.33	0.150	2,250	10,010	1,120	4,980	6,500	28,910	3,240	14,410	N/A	N/A	N/A	N/A	SB045AR0*RBC
55	0.48	0.218	2,860	12,720	1,470	6,540	8,270	36,790	4,260	18,950	N/A	N/A	N/A	N/A	SC045AR0*RBC
40	0.88	0.399	3,950	17,570	2,460	10,940	11,400	50,710	7,140	31,760	N/A	N/A	N/A	N/A	SD045AR0*RBC
29	2.10	0.953	7,090	31,540	4,550	20,240	20,460	91,010	13,200	58,720	N/A	N/A	N/A	N/A	SF045AR0*RBC
22	4.00	1.814	10,430	46,390	7,820	34,790	30,100	133,890	22,690	100,930	N/A	N/A	N/A	N/A	SG045AR0*RBC
80	0.23	0.104	1,750	7,780	800	3,560	5,060	22,510	2,310	10,280	N/A	N/A	N/A	N/A	SA047AR0*RBC
68	0.34	0.154	2,390	10,630	1,140	5,070	6,910	30,740	3,290	14,630	N/A	N/A	N/A	N/A	SB047AR0*RBC
58	0.50	0.227	3,020	13,430	1,500	6,670	8,720	38,790	4,340	19,310	N/A	N/A	N/A	N/A	SC047AR0*RBC
42	0.94	0.426	4,150	18,460	2,510	11,170	11,970	53,250	7,280	32,380	N/A	N/A	N/A	N/A	SD047AR0*RBC
30	2.20	0.998	7,330	32,610	4,610	20,510	21,160	94,120	13,380	59,520	N/A	N/A	N/A	N/A	SF047AR0*RBC
23	4.10	1.860	10,900	48,490	8,060	35,850	31,460	139,940	23,370	103,950	N/A	N/A	N/A	N/A	SG047AR0*RBC
84	0.24	0.109	1,840	8,180	810	3,600	5,310	23,620	2,360	10,500	N/A	N/A	N/A	N/A	SA050AR0*RBC
71	0.38	0.172	2,500	11,120	1,160	5,160	7,210	32,070	3,350	14,900	N/A	N/A	N/A	N/A	SB050AR0*RBC
61	0.58	0.263	3,180	14,150	1,540	6,850	9,170	40,790	4,450	19,790	N/A	N/A	N/A	N/A	SC050AR0*RBC
44	1.00	0.454	4,340	19,310	2,550	11,340	12,540	55,780	7,400	32,920	N/A	N/A	N/A	N/A	SD050AR0*RBC
31	2.30	1.043	7,570	33,670	4,650	20,680	21,870	97,280	13,480	59,960	N/A	N/A	N/A	N/A	SF050AR0*RBC
24	4.30	1.950	11,370	50,580	8,290	36,880	32,830	146,040	24,040	106,940	N/A	N/A	N/A	N/A	SG050AR0*RBC
92	0.25	0.113	2,020	8,990	830	3,690	5,820	25,890	2,410	10,720	N/A	N/A	N/A	N/A	SA055AR0*RBC
78	0.41	0.186	2,740	12,190	1,200	5,340	7,920	35,230	3,480	15,480	N/A	N/A	N/A	N/A	SB055AR0*RBC
66	0.59	0.268	3,440	15,300	1,560	6,940	9,920	44,130	4,540	20,190	N/A	N/A	N/A	N/A	SC055AR0*RBC
48	1.06	0.481	4,740	21,080	2,640	11,740	13,680	60,850	7,660	34,070	N/A	N/A	N/A	N/A	SD055AR0*RBC
34	2.50	1.134	8,310	36,960	4,820	21,440	23,980	106,670	13,980	62,190	N/A	N/A	N/A	N/A	SF055AR0*RBC

Refer to the Engineering section for load and speed limitations.

ANGULAR CONTACT, A-TYPE

THIN SECTION BALL BEARINGS

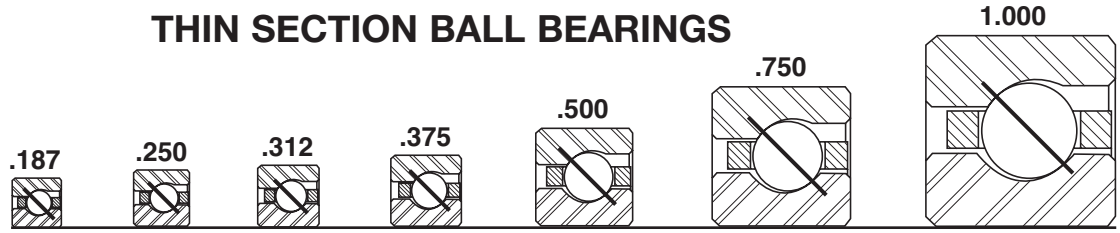

Series:	SAA	SA	SB	SC	SD	SF	SG
Cross Section Size:	3/16"	1/4"	5/16"	3/8"	1/2"	3/4"	1"

PART NUMBER*	NOMINAL DIMENSIONS														
	B Bore		D Outside Diameter		W Width		Land Diameter						f_1 Housing Fillet		Ball Diameter
							L_i -Inner Ring		L_o -Outer Ring		L_s -Counter Bore				
	in.	mm	in.	mm	in.	mm	in.	mm	in.	mm	in.	mm	in.	mm	in.
SG055AR0*RBC	5.5000	139.700	7.5000	190.500	1.0000	25.400	6.250	158.75	6.750	171.45	7.000	177.80	0.080	2.03	1/2
SA060AR0*RBC	6.0000	152.400	6.5000	165.100	0.2500	6.350	6.188	157.18	6.313	160.35	6.375	161.93	0.025	0.64	1/8
SB060AR0*RBC	6.0000	152.400	6.6250	168.275	0.3125	7.938	6.234	158.34	6.391	162.33	6.469	164.31	0.032	0.81	5/32
SC060AR0*RBC	6.0000	152.400	6.7500	171.450	0.3750	9.525	6.281	159.54	6.469	164.31	6.563	166.70	0.040	1.02	3/16
SD060AR0*RBC	6.0000	152.400	7.0000	177.800	0.5000	12.700	6.375	161.93	6.625	168.28	6.750	171.45	0.060	1.52	1/4
SF060AR0*RBC	6.0000	152.400	7.5000	190.500	0.7500	19.050	6.563	166.70	6.938	176.23	7.125	180.98	0.080	2.03	3/8
SG060AR0*RBC	6.0000	152.400	8.0000	203.200	1.0000	25.400	6.750	171.45	7.250	184.15	7.500	190.50	0.080	2.03	1/2
SA065AR0*RBC	6.5000	165.100	7.0000	177.800	0.2500	6.350	6.688	169.88	6.813	173.05	6.875	174.63	0.025	0.64	1/8
SB065AR0*RBC	6.5000	165.100	7.1250	180.975	0.3125	7.938	6.734	171.04	6.891	175.03	6.969	177.01	0.032	0.81	5/32
SC065AR0*RBC	6.5000	165.100	7.2500	184.150	0.3750	9.525	6.781	172.24	6.969	177.01	7.063	179.40	0.040	1.02	3/16
SD065AR0*RBC	6.5000	165.100	7.5000	190.500	0.5000	12.700	6.875	174.63	7.125	180.98	7.250	184.15	0.060	1.52	1/4
SF065AR0*RBC	6.5000	165.100	8.0000	203.200	0.7500	19.050	7.063	179.40	7.438	188.93	7.625	193.68	0.080	2.03	3/8
SG065AR0*RBC	6.5000	165.100	8.5000	215.900	1.0000	25.400	7.250	184.15	7.750	196.85	8.000	203.20	0.080	2.03	1/2
SA070AR0*RBC	7.0000	177.800	7.5000	190.500	0.2500	6.350	7.188	182.58	7.313	185.75	7.375	187.33	0.025	0.64	1/8
SB070AR0*RBC	7.0000	177.800	7.6250	193.675	0.3125	7.938	7.234	183.74	7.391	187.73	7.469	189.71	0.032	0.81	5/32
SC070AR0*RBC	7.0000	177.800	7.7500	196.850	0.3750	9.525	7.281	184.94	7.469	189.71	7.563	192.10	0.040	1.02	3/16
SD070AR0*RBC	7.0000	177.800	8.0000	203.200	0.5000	12.700	7.375	187.33	7.625	193.68	7.750	196.85	0.060	1.52	1/4
SF070AR0*RBC	7.0000	177.800	8.5000	215.900	0.7500	19.050	7.563	192.10	7.938	201.63	8.125	206.38	0.080	2.03	3/8
SG070AR0*RBC	7.0000	177.800	9.0000	228.600	1.0000	25.400	7.750	196.85	8.250	209.55	8.500	215.90	0.080	2.03	1/2
SA075AR0*RBC	7.5000	190.500	8.0000	203.200	0.2500	6.350	7.688	195.28	7.813	198.45	7.875	200.03	0.025	0.64	1/8
SB075AR0*RBC	7.5000	190.500	8.1250	206.375	0.3125	7.938	7.734	196.44	7.891	200.43	7.969	202.41	0.032	0.81	5/32
SC075AR0*RBC	7.5000	190.500	8.2500	209.550	0.3750	9.525	7.781	197.64	7.969	202.41	8.063	204.80	0.040	1.02	3/16
SD075AR0*RBC	7.5000	190.500	8.5000	215.900	0.5000	12.700	7.875	200.03	8.125	206.38	8.250	209.55	0.060	1.52	1/4
SF075AR0*RBC	7.5000	190.500	9.0000	228.600	0.7500	19.050	8.063	204.80	8.438	214.33	8.625	219.08	0.080	2.03	3/8
SG075AR0*RBC	7.5000	190.500	9.5000	241.300	1.0000	25.400	8.250	209.55	8.750	222.25	9.000	228.60	0.080	2.03	1/2
SA080AR0*RBC	8.0000	203.200	8.5000	215.900	0.2500	6.350	8.188	207.98	8.313	211.15	8.375	212.73	0.025	0.64	1/8
SB080AR0*RBC	8.0000	203.200	8.6250	219.075	0.3125	7.938	8.234	209.14	8.391	213.13	8.469	215.11	0.032	0.81	5/32
SC080AR0*RBC	8.0000	203.200	8.7500	222.250	0.3750	9.525	8.281	210.34	8.469	215.11	8.563	217.50	0.040	1.02	3/16
SD080AR0*RBC	8.0000	203.200	9.0000	228.600	0.5000	12.700	8.375	212.73	8.625	219.08	8.750	222.25	0.060	1.52	1/4
SF080AR0*RBC	8.0000	203.200	9.5000	241.300	0.7500	19.050	8.563	217.50	8.938	227.03	9.125	231.78	0.080	2.03	3/8
SG080AR0*RBC	8.0000	203.200	10.0000	254.000	1.0000	25.400	8.750	222.25	9.250	234.95	9.500	241.30	0.080	2.03	1/2
SA090AR0*RBC	9.0000	228.600	9.5000	241.300	0.2500	6.350	9.188	233.38	9.313	236.55	9.375	238.13	0.025	0.64	1/8
SB090AR0*RBC	9.0000	228.600	9.6250	244.475	0.3125	7.938	9.234	234.54	9.391	238.53	9.469	240.51	0.032	0.81	5/32
SC090AR0*RBC	9.0000	228.600	9.7500	247.650	0.3750	9.525	9.281	235.74	9.469	240.51	9.563	242.90	0.040	1.02	3/16
SD090AR0*RBC	9.0000	228.600	10.0000	254.000	0.5000	12.700	9.375	238.13	9.625	244.48	9.750	247.65	0.060	1.52	1/4
SF090AR0*RBC	9.0000	228.600	10.5000	266.700	0.7500	19.050	9.563	242.90	9.938	252.43	10.125	257.18	0.080	2.03	3/8
SG090AR0*RBC	9.0000	228.600	11.0000	279.400	1.0000	25.400	9.750	247.65	10.250	260.35	10.500	266.70	0.080	2.03	1/2
SA100AR0*RBC	10.0000	254.000	10.5000	266.700	0.2500	6.350	10.188	258.78	10.313	261.95	10.375	263.53	0.025	0.64	1/8
SB100AR0*RBC	10.0000	254.000	10.6250	269.875	0.3125	7.938	10.234	259.94	10.391	263.93	10.469	265.91	0.032	0.81	5/32
SC100AR0*RBC	10.0000	254.000	10.7500	273.050	0.3750	9.525	10.281	261.14	10.469	265.91	10.563	268.30	0.040	1.02	3/16
SD100AR0*RBC	10.0000	254.000	11.0000	279.400	0.5000	12.700	10.375	263.53	10.625	269.88	10.750	273.05	0.060	1.52	1/4
SF100AR0*RBC	10.0000	254.000	11.5000	292.100	0.7500	19.050	10.563	268.30	10.938	277.83	11.125	282.58	0.080	2.03	3/8
SG100AR0*RBC	10.0000	254.000	12.0000	304.800	1.0000	25.400	10.750	273.05	11.250	285.75	11.500	292.10	0.080	2.03	1/2

*The alphanumeric identification system is used under license.

- 440C Stainless Steel
- Large Diameter
- Light Weight
- Small Cross Section
- Circular Pocket Ball Separator

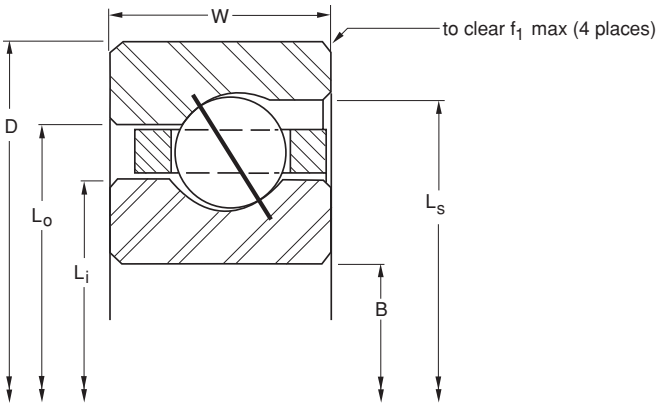

Ball Quantity	Approx. Weight		LOAD RATINGS												PART NUMBER*
			Radial				Thrust				Moment				
			Static		Dynamic		Static		Dynamic		Static		Dynamic		
	lbs.	kg	lbf	N	lbf	N	lbf	N	lbf	N	lbf - in	Nm	lbf - in	Nm	
26	4.70	2.132	12,320	54,800	8,610	38,300	35,570	158,220	24,960	111,030	N/A	N/A	N/A	N/A	SG055AR0*RBC
100	0.28	0.127	2,190	9,740	860	3,830	6,320	28,110	2,500	11,120	N/A	N/A	N/A	N/A	SA060AR0*RBC
85	0.44	0.200	2,990	13,300	1,240	5,520	8,630	38,390	3,600	16,010	N/A	N/A	N/A	N/A	SB060AR0*RBC
72	0.63	0.286	3,750	16,680	1,620	7,210	10,820	48,130	4,690	20,860	N/A	N/A	N/A	N/A	SC060AR0*RBC
52	1.16	0.526	5,130	22,820	2,720	12,100	14,820	65,920	7,880	35,050	N/A	N/A	N/A	N/A	SD060AR0*RBC
37	2.70	1.225	9,040	40,210	5,010	22,290	26,100	116,100	14,530	64,630	N/A	N/A	N/A	N/A	SF060AR0*RBC
28	5.10	2.313	13,270	59,030	8,860	39,410	38,300	170,370	25,700	114,320	N/A	N/A	N/A	N/A	SG060AR0*RBC
108	0.30	0.136	2,370	10,540	890	3,960	6,830	30,380	2,580	11,480	N/A	N/A	N/A	N/A	SA065AR0*RBC
91	0.47	0.213	3,200	14,230	1,260	5,600	9,240	41,100	3,650	16,240	N/A	N/A	N/A	N/A	SB065AR0*RBC
78	0.68	0.308	4,060	18,060	1,670	7,430	11,720	52,130	4,830	21,480	N/A	N/A	N/A	N/A	SC065AR0*RBC
56	1.22	0.553	5,530	24,600	2,780	12,370	15,960	70,990	8,070	35,900	N/A	N/A	N/A	N/A	SD065AR0*RBC
40	2.90	1.315	9,770	43,460	5,140	22,860	28,220	125,530	14,920	66,370	N/A	N/A	N/A	N/A	SF065AR0*RBC
30	5.40	2.449	14,220	63,250	9,110	40,520	41,040	182,560	26,410	117,480	N/A	N/A	N/A	N/A	SG065AR0*RBC
116	0.31	0.141	2,540	11,300	900	4,000	7,340	32,650	2,600	11,570	N/A	N/A	N/A	N/A	SA070AR0*RBC
98	0.50	0.227	3,450	15,350	1,300	5,780	9,960	44,300	3,760	16,730	N/A	N/A	N/A	N/A	SB070AR0*RBC
83	0.73	0.331	4,320	19,220	1,720	7,650	12,470	55,470	4,980	22,150	N/A	N/A	N/A	N/A	SC070AR0*RBC
60	1.31	0.594	5,920	26,330	2,850	12,680	17,100	76,060	8,260	36,740	N/A	N/A	N/A	N/A	SD070AR0*RBC
43	3.20	1.451	10,510	46,750	5,290	23,530	30,330	134,910	15,350	68,280	N/A	N/A	N/A	N/A	SF070AR0*RBC
32	5.80	2.631	15,160	67,440	9,370	41,680	43,780	194,740	27,160	120,810	N/A	N/A	N/A	N/A	SG070AR0*RBC
124	0.34	0.154	2,720	12,100	920	4,090	7,840	34,870	2,660	11,830	N/A	N/A	N/A	N/A	SA075AR0*RBC
105	0.53	0.240	3,700	16,460	1,330	5,920	10,670	47,460	3,860	17,170	N/A	N/A	N/A	N/A	SB075AR0*RBC
89	0.78	0.354	4,630	20,600	1,750	7,780	13,380	59,520	5,090	22,640	N/A	N/A	N/A	N/A	SC075AR0*RBC
64	1.41	0.640	6,320	28,110	2,940	13,080	18,240	81,140	8,520	37,900	N/A	N/A	N/A	N/A	SD075AR0*RBC
45	3.40	1.542	11,000	48,930	5,380	23,930	31,740	141,190	15,590	69,350	N/A	N/A	N/A	N/A	SF075AR0*RBC
34	6.10	2.767	16,110	71,660	9,560	42,530	46,510	206,890	27,710	123,260	N/A	N/A	N/A	N/A	SG075AR0*RBC
132	0.38	0.172	2,890	12,860	960	4,270	8,350	37,140	2,770	12,320	N/A	N/A	N/A	N/A	SA080AR0*RBC
112	0.57	0.259	3,940	17,530	1,360	6,050	11,380	50,620	3,950	17,570	N/A	N/A	N/A	N/A	SB080AR0*RBC
95	0.84	0.381	4,950	22,020	1,800	8,010	14,280	63,520	5,210	23,180	N/A	N/A	N/A	N/A	SC080AR0*RBC
68	1.53	0.694	6,710	29,850	2,990	13,300	19,380	86,210	8,670	38,570	N/A	N/A	N/A	N/A	SD080AR0*RBC
48	3.50	1.588	11,730	52,180	5,520	24,550	33,860	150,620	16,020	71,260	N/A	N/A	N/A	N/A	SF080AR0*RBC
36	6.50	2.948	17,060	75,890	9,800	43,590	49,250	219,070	28,430	126,460	N/A	N/A	N/A	N/A	SG080AR0*RBC
148	0.44	0.200	3,240	14,410	990	4,400	9,360	41,640	2,860	12,720	N/A	N/A	N/A	N/A	SA090AR0*RBC
125	0.66	0.299	4,400	19,570	1,410	6,270	12,700	56,490	4,080	18,150	N/A	N/A	N/A	N/A	SB090AR0*RBC
106	0.94	0.426	5,520	24,550	1,860	8,270	15,930	70,860	5,400	24,020	N/A	N/A	N/A	N/A	SC090AR0*RBC
76	1.72	0.780	7,500	33,360	3,100	13,790	21,660	96,350	9,000	40,030	N/A	N/A	N/A	N/A	SD090AR0*RBC
54	3.90	1.769	13,190	58,670	5,780	25,710	38,090	169,430	16,760	74,550	N/A	N/A	N/A	N/A	SF090AR0*RBC
40	7.20	3.266	18,960	84,340	10,190	45,330	54,720	243,410	29,540	131,400	N/A	N/A	N/A	N/A	SG090AR0*RBC
164	0.50	0.227	3,590	15,970	1,030	4,580	10,370	46,130	3,000	13,340	N/A	N/A	N/A	N/A	SA100AR0*RBC
139	0.73	0.331	4,890	21,750	1,480	6,580	14,120	62,810	4,290	19,080	N/A	N/A	N/A	N/A	SB100AR0*RBC
118	1.06	0.481	6,140	27,310	1,942	8,640	17,730	78,870	5,570	24,780	N/A	N/A	N/A	N/A	SC100AR0*RBC
84	1.88	0.853	8,290	36,880	3,240	14,410	23,940	106,490	9,390	41,770	N/A	N/A	N/A	N/A	SD100AR0*RBC
59	4.30	1.950	14,420	64,140	5,980	26,600	41,620	185,130	17,330	77,090	N/A	N/A	N/A	N/A	SF100AR0*RBC
44	7.90	3.583	20,850	92,750	10,560	46,970	60,190	267,740	30,620	136,200	N/A	N/A	N/A	N/A	SG100AR0*RBC

Refer to the Engineering section for load and speed limitations.

ANGULAR CONTACT, A-TYPE

THIN SECTION BALL BEARINGS

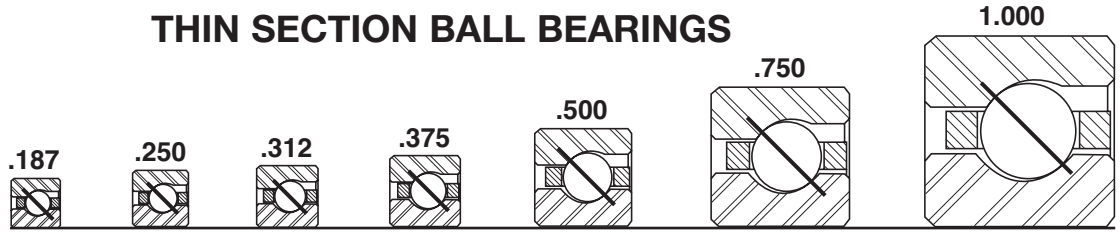

Series:	SAA	SA	SB	SC	SD	SF	SG
Cross Section Size:	3/16"	1/4"	5/16"	3/8"	1/2"	3/4"	1"

PART NUMBER*	NOMINAL DIMENSIONS														
	B Bore		D Outside Diameter		W Width		Land Diameter						f_1 Housing Fillet		Ball Diameter
							L_i -Inner Ring		L_o -Outer Ring		L_s -Counter Bore				
	in.	mm	in.	mm	in.	mm	in.	mm	in.	mm	in.	mm	in.	mm	in.
SA110AR0*RBC	11.0000	279.400	11.5000	292.100	0.2500	6.350	11.188	284.18	11.313	287.35	11.375	288.93	0.025	0.64	1/8
SB110AR0*RBC	11.0000	279.400	11.6250	295.275	0.3125	7.938	11.234	285.34	11.391	289.33	11.469	291.31	0.032	0.81	5/32
SC110AR0*RBC	11.0000	279.400	11.7500	298.450	0.3750	9.525	11.281	286.54	11.469	291.31	11.563	293.70	0.040	1.02	3/16
SD110AR0*RBC	11.0000	279.400	12.0000	304.800	0.5000	12.700	11.375	288.93	11.625	295.28	11.750	298.45	0.060	1.52	1/4
SF110AR0*RBC	11.0000	279.400	12.5000	317.500	0.7500	19.050	11.563	293.70	11.938	303.23	12.125	307.98	0.080	2.03	3/8
SG110AR0*RBC	11.0000	279.400	13.0000	330.200	1.0000	25.400	11.750	298.45	12.250	311.15	12.500	317.50	0.080	2.03	1/2
SA120AR0*RBC	12.0000	304.800	12.5000	317.500	0.2500	6.350	12.188	309.58	12.313	312.75	12.375	314.33	0.025	0.64	1/8
SB120AR0*RBC	12.0000	304.800	12.6250	320.675	0.3125	7.938	12.234	310.74	12.391	314.73	12.469	316.71	0.032	0.81	5/32
SC120AR0*RBC	12.0000	304.800	12.7500	323.850	0.3750	9.525	12.281	311.94	12.469	316.71	12.563	319.10	0.040	1.02	3/16
SD120AR0*RBC	12.0000	304.800	13.0000	330.200	0.5000	12.700	12.375	314.33	12.625	320.68	12.750	323.85	0.060	1.52	1/4
SF120AR0*RBC	12.0000	304.800	13.5000	342.900	0.7500	19.050	12.563	319.10	12.938	328.63	13.125	333.38	0.080	2.03	3/8
SG120AR0*RBC	12.0000	304.800	14.0000	355.600	1.0000	25.400	12.750	323.85	13.250	336.55	13.500	342.90	0.080	2.03	1/2
SB140AR0*RBC	14.0000	355.600	14.6250	371.475	0.3125	7.938	14.234	361.54	14.391	365.53	14.469	367.51	0.032	0.81	5/32
SC140AR0*RBC	14.0000	355.600	14.7500	374.650	0.3750	9.525	14.281	362.74	14.469	367.51	14.563	369.90	0.040	1.02	3/16
SD140AR0*RBC	14.0000	355.600	15.0000	381.000	0.5000	12.700	14.375	365.13	14.625	371.48	14.750	374.65	0.060	1.52	1/4
SF140AR0*RBC	14.0000	355.600	15.5000	393.700	0.7500	19.050	14.563	369.90	14.938	379.43	15.125	384.18	0.080	2.03	3/8
SG140AR0*RBC	14.0000	355.600	16.0000	406.400	1.0000	25.400	14.750	374.65	15.250	387.35	15.500	393.70	0.080	2.03	1/2
SB160AR0*RBC	16.0000	406.400	16.6250	422.275	0.3125	7.938	16.234	412.34	16.391	416.33	16.469	418.31	0.032	0.81	5/32
SC160AR0*RBC	16.0000	406.400	16.7500	425.450	0.3750	9.525	16.281	413.54	16.469	418.31	16.563	420.70	0.040	1.02	3/16
SD160AR0*RBC	16.0000	406.400	17.0000	431.800	0.5000	12.700	16.375	415.93	16.625	422.28	16.750	425.45	0.060	1.52	1/4
SF160AR0*RBC	16.0000	406.400	17.5000	444.500	0.7500	19.050	16.563	420.70	16.938	430.23	17.125	434.98	0.080	2.03	3/8
SG160AR0*RBC	16.0000	406.400	18.0000	457.200	1.0000	25.400	16.750	425.45	17.250	438.15	17.500	444.50	0.080	2.03	1/2
SB180AR0*RBC	18.0000	457.200	18.6250	473.075	0.3125	7.938	18.234	463.14	18.391	467.13	18.469	469.11	0.032	0.81	5/32
SC180AR0*RBC	18.0000	457.200	18.7500	476.250	0.3750	9.525	18.281	464.34	18.469	469.11	18.563	471.50	0.040	1.02	3/16
SD180AR0*RBC	18.0000	457.200	19.0000	482.600	0.5000	12.700	18.375	466.73	18.625	473.08	18.750	476.25	0.060	1.52	1/4
SF180AR0*RBC	18.0000	457.200	19.5000	495.300	0.7500	19.050	18.563	471.50	18.938	481.03	19.125	485.78	0.080	2.03	3/8
SG180AR0*RBC	18.0000	457.200	20.0000	508.000	1.0000	25.400	18.750	476.25	19.250	488.95	19.500	495.30	0.080	2.03	1/2
SB200AR0*RBC	20.0000	508.000	20.6250	523.875	0.3125	7.938	20.234	513.94	20.391	517.93	20.469	519.91	0.032	0.81	5/32
SC200AR0*RBC	20.0000	508.000	20.7500	527.050	0.3750	9.525	20.281	515.14	20.469	519.91	20.563	522.30	0.040	1.02	3/16
SD200AR0*RBC	20.0000	508.000	21.0000	533.400	0.5000	12.700	20.375	517.53	20.625	523.88	20.750	527.05	0.060	1.52	1/4
SF200AR0*RBC	20.0000	508.000	21.5000	546.100	0.7500	19.050	20.563	522.30	20.938	531.83	21.125	536.58	0.080	2.03	3/8
SG200AR0*RBC	20.0000	508.000	22.0000	558.800	1.0000	25.400	20.750	527.05	21.250	539.75	21.500	546.10	0.080	2.03	1/2
SC250AR0*RBC	25.0000	635.000	25.7500	654.050	0.3750	9.525	25.281	642.14	25.469	646.91	25.563	649.30	0.040	1.02	3/16
SD250AR0*RBC	25.0000	635.000	26.0000	660.400	0.5000	12.700	25.375	644.53	25.625	650.88	25.750	654.05	0.060	1.52	1/4
SF250AR0*RBC	25.0000	635.000	26.5000	673.100	0.7500	19.050	25.563	649.30	25.938	658.83	26.125	663.58	0.080	2.03	3/8
SG250AR0*RBC	25.0000	635.000	27.0000	685.800	1.0000	25.400	25.750	654.05	26.250	666.75	26.500	673.10	0.080	2.03	1/2
SC300AR0*RBC	30.0000	762.000	30.7500	781.050	0.3750	9.525	30.281	769.14	30.469	773.91	30.563	776.30	0.040	1.02	3/16
SD300AR0*RBC	30.0000	762.000	31.0000	787.400	0.5000	12.700	30.375	771.53	30.625	777.88	30.750	781.05	0.060	1.52	1/4
SF300AR0*RBC	30.0000	762.000	31.5000	800.100	0.7500	19.050	30.563	776.30	30.938	785.83	31.125	790.58	0.080	2.03	3/8
SG300AR0*RBC	30.0000	762.000	32.0000	812.800	1.0000	25.400	30.750	781.05	31.250	793.75	31.500	800.10	0.080	2.03	1/2
SF350AR0*RBC	35.0000	889.000	36.5000	927.100	0.7500	19.050	35.563	903.30	35.938	912.83	36.125	917.58	0.080	2.03	3/8
SG350AR0*RBC	35.0000	889.000	37.0000	939.800	1.0000	25.400	35.750	908.05	36.250	920.75	36.500	927.10	0.080	2.03	1/2
SF400AR0*RBC	40.0000	1016.000	41.5000	1054.100	0.7500	19.050	40.563	1030.30	40.938	1039.83	41.125	1044.58	0.080	2.03	3/8
SG400AR0*RBC	40.0000	1016.000	42.0000	1066.800	1.0000	25.400	40.750	1035.05	41.250	1047.75	41.500	1054.10	0.080	2.03	1/2

*The alphanumeric identification system is used under license.

- 440C Stainless Steel
- Large Diameter
- Light Weight
- Small Cross Section
- Circular Pocket Ball Separator

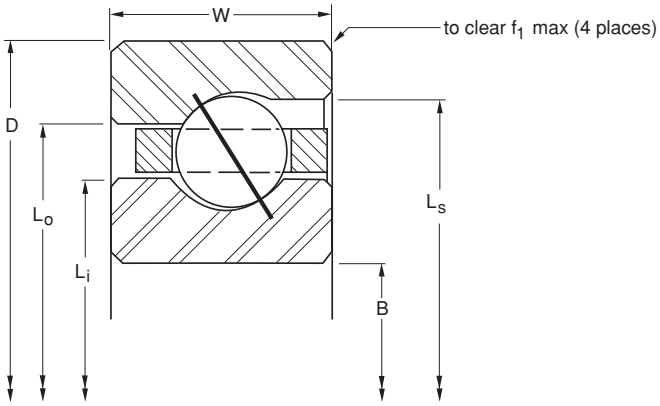

Ball Quantity	Approx. Weight		LOAD RATINGS												PART NUMBER*
			Radial				Thrust				Moment				
			Static		Dynamic		Static		Dynamic		Static		Dynamic		
	lbs.	kg	lbf	N	lbf	N	lbf	N	lbf	N	lbf - in	Nm	lbf - in	Nm	
180	0.52	0.236	3,940	17,530	1,072	4,770	11,380	50,620	3,100	13,790	N/A	N/A	N/A	N/A	SA110AR0*RBC
152	0.75	0.340	5,350	23,800	1,540	6,850	15,440	68,680	4,350	19,350	N/A	N/A	N/A	N/A	SB110AR0*RBC
129	1.16	0.526	6,720	29,890	2,047	9,110	19,390	86,250	5,780	25,710	N/A	N/A	N/A	N/A	SC110AR0*RBC
92	2.06	0.934	9,080	40,390	3,310	14,720	26,220	116,630	9,600	42,700	N/A	N/A	N/A	N/A	SD110AR0*RBC
65	4.80	2.177	15,880	70,640	6,227	27,700	45,850	203,950	17,870	79,490	N/A	N/A	N/A	N/A	SF110AR0*RBC
48	8.60	3.901	22,750	101,200	10,920	48,570	65,660	292,070	31,660	140,830	N/A	N/A	N/A	N/A	SG110AR0*RBC
196	0.56	0.254	4,290	19,080	1,128	5,020	12,390	55,110	3,200	14,230	N/A	N/A	N/A	N/A	SA120AR0*RBC
166	0.83	0.376	5,840	25,980	1,623	7,220	16,860	75,000	4,510	20,060	N/A	N/A	N/A	N/A	SB120AR0*RBC
140	1.25	0.567	7,290	32,430	2,147	9,550	21,040	93,590	5,980	26,600	N/A	N/A	N/A	N/A	SC120AR0*RBC
100	2.25	1.021	9,870	43,900	3,430	15,260	28,500	126,770	9,950	44,260	N/A	N/A	N/A	N/A	SD120AR0*RBC
70	5.20	2.359	17,100	76,060	6,487	28,860	49,380	219,650	18,340	81,580	N/A	N/A	N/A	N/A	SF120AR0*RBC
52	9.30	4.218	24,640	109,600	11,230	49,950	71,140	316,450	32,570	144,880	N/A	N/A	N/A	N/A	SG120AR0*RBC
192	1.05	0.476	6,760	30,070	1,767	7,860	19,500	86,740	4,840	21,530	N/A	N/A	N/A	N/A	SB140AR0*RBC
163	1.52	0.689	8,490	37,770	2,347	10,440	24,500	108,980	6,330	28,160	N/A	N/A	N/A	N/A	SC140AR0*RBC
116	2.73	1.238	11,450	50,930	3,582	15,930	33,060	147,060	10,340	45,990	N/A	N/A	N/A	N/A	SD140AR0*RBC
81	6.00	2.722	19,790	88,030	7,043	31,330	57,140	254,170	19,490	86,700	N/A	N/A	N/A	N/A	SF140AR0*RBC
60	10.80	4.899	28,430	126,460	11,770	52,360	82,080	365,110	34,150	151,910	N/A	N/A	N/A	N/A	SG140AR0*RBC
219	1.20	0.544	7,710	34,300	1,907	8,480	22,250	98,970	5,150	22,910	N/A	N/A	N/A	N/A	SB160AR0*RBC
186	1.73	0.785	9,680	43,060	2,533	11,270	27,950	124,330	6,730	29,940	N/A	N/A	N/A	N/A	SC160AR0*RBC
132	3.10	1.406	13,030	57,960	3,856	17,150	37,620	167,340	11,030	49,060	N/A	N/A	N/A	N/A	SD160AR0*RBC
92	7.10	3.221	22,480	100,000	7,563	33,640	64,890	288,650	20,310	90,340	N/A	N/A	N/A	N/A	SF160AR0*RBC
68	12.30	5.579	32,220	143,320	12,360	54,980	93,020	413,770	35,850	159,470	N/A	N/A	N/A	N/A	SG160AR0*RBC
246	1.35	0.612	8,660	38,520	2,038	9,070	24,990	111,160	5,510	24,510	N/A	N/A	N/A	N/A	SB180AR0*RBC
209	1.94	0.880	10,880	48,400	2,707	12,040	31,410	139,720	7,280	32,380	N/A	N/A	N/A	N/A	SC180AR0*RBC
148	3.48	1.579	14,610	64,990	4,113	18,300	42,180	187,630	11,390	50,670	N/A	N/A	N/A	N/A	SD180AR0*RBC
104	7.90	3.583	25,410	113,030	8,103	36,040	73,360	326,320	21,210	94,350	N/A	N/A	N/A	N/A	SF180AR0*RBC
76	13.70	6.214	36,020	160,220	12,898	57,370	104,000	462,620	37,230	165,610	N/A	N/A	N/A	N/A	SG180AR0*RBC
273	1.50	0.680	9,610	42,750	2,162	9,620	27,730	123,350	5,900	26,240	N/A	N/A	N/A	N/A	SB200AR0*RBC
231	2.16	0.980	12,030	53,510	2,863	12,740	34,720	154,440	7,780	34,610	N/A	N/A	N/A	N/A	SC200AR0*RBC
164	3.85	1.746	16,190	72,020	4,356	19,380	46,740	207,910	11,920	53,020	N/A	N/A	N/A	N/A	SD200AR0*RBC
115	8.90	4.037	28,100	125,000	8,562	38,090	81,120	360,840	22,680	100,890	N/A	N/A	N/A	N/A	SF200AR0*RBC
84	15.80	7.167	39,810	177,080	13,612	60,550	114,900	511,100	38,830	172,720	N/A	N/A	N/A	N/A	SG200AR0*RBC
288	2.69	1.220	14,900	66,280	3,233	14,380	43,280	192,520	9,010	40,080	N/A	N/A	N/A	N/A	SC250AR0*RBC
204	4.79	2.173	20,140	89,590	4,908	21,830	58,140	258,620	13,540	60,230	N/A	N/A	N/A	N/A	SD250AR0*RBC
142	10.90	4.944	34,700	154,350	9,585	42,640	100,200	445,710	26,100	116,100	N/A	N/A	N/A	N/A	SF250AR0*RBC
104	19.50	8.845	49,280	219,210	15,239	67,790	142,300	632,980	41,420	184,250	N/A	N/A	N/A	N/A	SG250AR0*RBC
345	3.21	1.456	17,960	79,890	3,561	15,840	51,850	230,640	10,160	45,190	N/A	N/A	N/A	N/A	SC300AR0*RBC
244	5.73	2.599	24,090	107,160	5,397	24,010	69,540	309,330	15,260	67,880	N/A	N/A	N/A	N/A	SD300AR0*RBC
170	13.00	5.897	41,540	184,780	10,533	46,850	119,900	533,340	29,430	130,910	N/A	N/A	N/A	N/A	SF300AR0*RBC
124	23.30	10.569	58,760	261,380	16,687	74,230	169,600	754,420	46,020	204,710	N/A	N/A	N/A	N/A	SG300AR0*RBC
198	15.10	6.849	48,380	215,200	11,382	50,630	139,700	621,420	32,580	144,920	N/A	N/A	N/A	N/A	SF350AR0*RBC
144	27.10	12.292	68,240	303,550	17,982	79,990	197,000	876,300	50,840	226,150	N/A	N/A	N/A	N/A	SG350AR0*RBC
226	17.20	7.802	55,220	245,630	12,147	54,030	159,400	709,050	35,580	158,270	N/A	N/A	N/A	N/A	SF400AR0*RBC
164	30.80	13.971	77,720	345,720	19,153	85,200	224,400	998,180	55,440	246,610	N/A	N/A	N/A	N/A	SG400AR0*RBC

Refer to the Engineering section for load and speed limitations.

4-POINT CONTACT, X-TYPE

THIN SECTION BALL BEARINGS

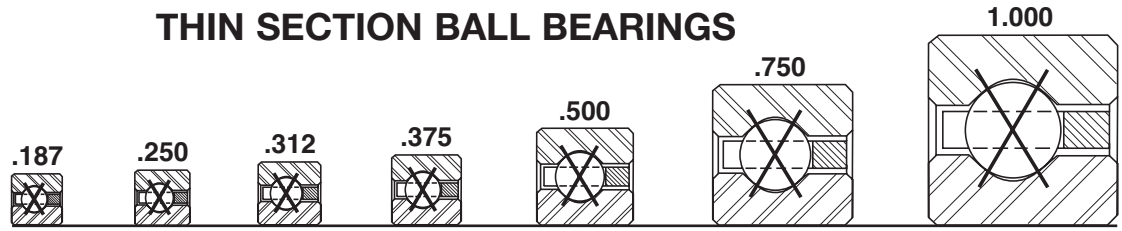

Series:	SAA	SA	SB	SC	SD	SF	SG
Cross Section Size:	3/16"	1/4"	5/16"	3/8"	1/2"	3/4"	1"

PART NUMBER*	NOMINAL DIMENSIONS												
	B Bore		D Outside Diameter		W Width		Land Diameter L_i -Inner Ring		Land Diameter L_o -Outer Ring		f_1 Housing Fillet		Ball Diameter
	in.	mm	in.	mm	in.	mm	in.	mm	in.	mm	in.	mm	in.
SAA10XL0*RBC	1.0000	25.400	1.3750	34.925	0.1875	4.763	1.141	28.98	1.234	31.34	0.015	0.38	3/32
SAA15XL0*RBC	1.5000	38.100	1.8750	47.625	0.1875	4.763	1.641	41.68	1.734	44.04	0.015	0.38	3/32
SAA17XL0*RBC	1.7500	44.450	2.1250	53.975	0.1875	4.763	1.890	48.01	1.985	50.42	0.015	0.38	3/32
SA020XP0*RBC	2.0000	50.800	2.5000	63.500	0.2500	6.350	2.188	55.58	2.313	58.75	0.025	0.64	1/8
SB020XP0*RBC	2.0000	50.800	2.6250	66.675	0.3125	7.938	2.234	56.74	2.391	60.73	0.032	0.81	5/32
SA025XP0*RBC	2.5000	63.500	3.0000	76.200	0.2500	6.350	2.688	68.28	2.813	71.45	0.025	0.64	1/8
SB025XP0*RBC	2.5000	63.500	3.1250	79.375	0.3125	7.938	2.734	69.44	2.891	73.43	0.040	1.02	5/32
SA030XP0*RBC	3.0000	76.200	3.5000	88.900	0.2500	6.350	3.188	80.98	3.313	84.15	0.025	0.64	1/8
SB030XP0*RBC	3.0000	76.200	3.6250	92.075	0.3125	7.938	3.234	82.14	3.391	86.13	0.032	0.81	5/32
SA035XP0*RBC	3.5000	88.900	4.0000	101.600	0.2500	6.350	3.688	93.68	3.813	96.85	0.025	0.64	1/8
SB035XP0*RBC	3.5000	88.900	4.1250	104.775	0.3125	7.938	3.734	94.84	3.891	98.83	0.032	0.81	5/32
SA040XP0*RBC	4.0000	101.600	4.5000	114.300	0.2500	6.350	4.188	106.38	4.313	109.55	0.025	0.64	1/8
SB040XP0*RBC	4.0000	101.600	4.6250	117.475	0.3125	7.938	4.234	107.54	4.391	111.53	0.032	0.81	5/32
SC040XP0*RBC	4.0000	101.600	4.7500	120.650	0.3750	9.525	4.281	108.74	4.469	113.51	0.040	1.02	3/16
SD040XP0*RBC	4.0000	101.600	5.0000	127.000	0.5000	12.700	4.375	111.13	4.625	117.48	0.060	1.52	1/4
SF040XP0*RBC	4.0000	101.600	5.5000	139.700	0.7500	19.050	4.563	115.90	4.938	125.43	0.080	2.03	3/8
SG040XP0*RBC	4.0000	101.600	6.0000	152.400	1.0000	25.400	4.750	120.65	5.250	133.35	0.080	2.03	1/2
SA042XP0*RBC	4.2500	107.950	4.7500	120.650	0.2500	6.350	4.438	112.73	4.563	115.90	0.025	0.64	1/8
SB042XP0*RBC	4.2500	107.950	4.8750	123.825	0.3125	7.938	4.484	113.89	4.641	117.88	0.032	0.81	5/32
SC042XP0*RBC	4.2500	107.950	5.0000	127.000	0.3750	9.525	4.531	115.09	4.719	119.86	0.040	1.02	3/16
SD042XP0*RBC	4.2500	107.950	5.2500	133.350	0.5000	12.700	4.625	117.48	4.875	123.83	0.060	1.52	1/4
SF042XP0*RBC	4.2500	107.950	5.7500	146.050	0.7500	19.050	4.813	122.25	5.188	131.78	0.080	2.03	3/8
SG042XP0*RBC	4.2500	107.950	6.2500	158.750	1.0000	25.400	5.000	127.00	5.500	139.70	0.080	2.03	1/2
SA045XP0*RBC	4.5000	114.300	5.0000	127.000	0.2500	6.350	4.688	119.08	4.813	122.25	0.025	0.64	1/8
SB045XP0*RBC	4.5000	114.300	5.1250	130.175	0.3125	7.938	4.734	120.24	4.891	124.23	0.032	0.81	5/32
SC045XP0*RBC	4.5000	114.300	5.2500	133.350	0.3750	9.525	4.781	121.44	4.969	126.21	0.040	1.02	3/16
SD045XP0*RBC	4.5000	114.300	5.5000	139.700	0.5000	12.700	4.875	123.83	5.125	130.18	0.060	1.52	1/4
SF045XP0*RBC	4.5000	114.300	6.0000	152.400	0.7500	19.050	5.063	128.60	5.438	138.13	0.080	2.03	3/8
SG045XP0*RBC	4.5000	114.300	6.5000	165.100	1.0000	25.400	5.250	133.35	5.750	146.05	0.080	2.03	1/2
SA047XP0*RBC	4.7500	120.650	5.2500	133.350	0.2500	6.350	4.938	125.43	5.063	128.60	0.025	0.64	1/8
SB047XP0*RBC	4.7500	120.650	5.3750	136.525	0.3125	7.938	4.984	126.59	5.141	130.58	0.032	0.81	5/32
SC047XP0*RBC	4.7500	120.650	5.5000	139.700	0.3750	9.525	5.031	127.79	5.219	132.56	0.040	1.02	3/16
SD047XP0*RBC	4.7500	120.650	5.7500	146.050	0.5000	12.700	5.125	130.18	5.375	136.53	0.060	1.52	1/4
SF047XP0*RBC	4.7500	120.650	6.2500	158.750	0.7500	19.050	5.313	134.95	5.688	144.48	0.080	2.03	3/8
SG047XP0*RBC	4.7500	120.650	6.7500	171.450	1.0000	25.400	5.500	139.70	6.000	152.40	0.080	2.03	1/2
SA050XP0*RBC	5.0000	127.000	5.5000	139.700	0.2500	6.350	5.188	131.78	5.313	134.95	0.025	0.64	1/8
SB050XP0*RBC	5.0000	127.000	5.6250	142.875	0.3125	7.938	5.234	132.94	5.391	136.93	0.032	0.81	5/32
SC050XP0*RBC	5.0000	127.000	5.7500	146.050	0.3750	9.525	5.281	134.14	5.469	138.91	0.040	1.02	3/16
SD050XP0*RBC	5.0000	127.000	6.0000	152.400	0.5000	12.700	5.375	136.53	5.625	142.88	0.060	1.52	1/4
SF050XP0*RBC	5.0000	127.000	6.5000	165.100	0.7500	19.050	5.563	141.30	5.938	150.83	0.080	2.03	3/8
SG050XP0*RBC	5.0000	127.000	7.0000	177.800	1.0000	25.400	5.750	146.05	6.250	158.75	0.080	2.03	1/2
SA055XP0*RBC	5.5000	139.700	6.0000	152.400	0.2500	6.350	5.688	144.48	5.813	147.65	0.025	0.64	1/8
SB055XP0*RBC	5.5000	139.700	6.1250	155.575	0.3125	7.938	5.734	145.64	5.891	149.63	0.032	0.81	5/32
SC055XP0*RBC	5.5000	139.700	6.2500	158.750	0.3750	9.525	5.781	146.84	5.969	151.61	0.040	1.02	3/16
SD055XP0*RBC	5.5000	139.700	6.5000	165.100	0.5000	12.700	5.875	149.23	6.125	155.58	0.060	1.52	1/4
SF055XP0*RBC	5.5000	139.700	7.0000	177.800	0.7500	19.050	6.063	154.00	6.438	163.53	0.080	2.03	3/8

*The alphanumeric identification system is used under license.

- 440C Stainless Steel
- Large Diameter
- Light Weight
- Small Cross Section
- Snap-Over Ball Separator

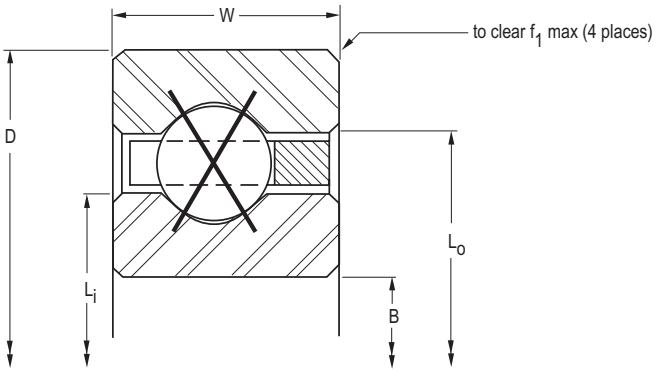

Ball Quantity	Approx. Weight		LOAD RATINGS												PART NUMBER*
			Radial				Thrust				Moment				
			Static		Dynamic		Static		Dynamic		Static		Dynamic		
	lbs.	kg	lbf	N	lbf	N	lbf	N	lbf	N	lbf - in	Nm	lbf - in	Nm	
21	0.03	0.014	290	1,290	270	1,200	730	3,250	680	3,020	170	20	160	20	SAA10XL0*RBC
30	0.04	0.018	400	1,780	310	1,380	1,000	4,450	770	3,430	340	40	260	30	SAA15XL0*RBC
33	0.06	0.027	460	2,050	322	1,430	1,140	5,070	805	3,580	440	50	328	37	SAA17XL0*RBC
27	0.10	0.045	680	3,020	514	2,290	1,710	7,610	1,230	5,470	770	90	550	60	SA020XP0*RBC
23	0.16	0.073	930	4,140	758	3,370	2,340	10,410	1,740	7,740	1,080	120	800	90	SB020XP0*RBC
33	0.13	0.059	830	3,690	583	2,590	2,090	9,300	1,320	5,870	1,150	130	730	80	SA025XP0*RBC
28	0.20	0.091	1,140	5,070	848	3,770	2,840	12,630	1,880	8,360	1,600	180	1,060	120	SB025XP0*RBC
39	0.15	0.068	990	4,400	643	2,860	2,470	10,990	1,410	6,270	1,600	180	920	100	SA030XP0*RBC
33	0.24	0.109	1,340	5,960	933	4,150	3,350	14,900	1,990	8,850	2,220	250	1,320	150	SB030XP0*RBC
45	0.18	0.082	1,140	5,070	701	3,120	2,850	12,680	1,480	6,580	2,130	240	1,110	130	SA035XP0*RBC
38	0.27	0.122	1,540	6,850	1,014	4,510	3,860	17,170	2,100	9,340	2,940	330	1,600	180	SB035XP0*RBC
51	0.19	0.086	1,290	5,740	756	3,360	3,220	14,320	1,550	6,890	2,740	310	1,320	150	SA040XP0*RBC
43	0.30	0.136	1,750	7,780	1,091	4,850	4,370	19,440	2,210	9,830	3,770	430	1,900	210	SB040XP0*RBC
35	0.45	0.204	2,100	9,340	1,417	6,300	5,260	23,400	2,810	12,500	4,600	520	2,460	280	SC040XP0*RBC
27	0.78	0.354	3,080	13,700	2,311	10,280	7,700	34,250	4,890	21,750	6,930	780	4,400	500	SD040XP0*RBC
19	1.90	0.862	5,360	23,840	4,665	20,750	13,400	59,610	8,830	39,280	12,730	1,440	8,390	950	SF040XP0*RBC
15	3.60	1.633	8,210	36,520	7,979	35,490	20,520	91,280	15,150	67,390	20,520	2,320	15,150	1,710	SG040XP0*RBC
54	0.20	0.091	1,370	6,090	783	3,480	3,410	15,170	1,590	7,070	3,070	350	1,430	160	SA042XP0*RBC
45	0.31	0.141	1,830	8,140	1,120	4,980	4,570	20,330	2,230	9,920	4,170	470	2,040	230	SB042XP0*RBC
37	0.47	0.213	2,220	9,880	1,464	6,510	5,560	24,730	2,870	12,770	5,140	580	2,650	300	SC042XP0*RBC
28	0.83	0.376	3,190	14,190	2,355	10,480	7,980	35,500	4,920	21,890	7,580	860	4,670	530	SD042XP0*RBC
20	2.00	0.907	5,640	25,090	4,795	21,330	14,110	62,760	8,990	39,990	14,110	1,590	8,993	1,020	SF042XP0*RBC
15	3.80	1.724	8,210	36,520	7,917	35,220	20,520	91,280	15,150	67,390	21,550	2,430	15,910	1,800	SG042XP0*RBC
57	0.22	0.100	1,440	6,410	809	3,600	3,600	16,010	1,610	7,160	3,420	390	1,530	170	SA045XP0*RBC
48	0.33	0.150	1,950	8,670	1,165	5,180	4,880	21,710	2,300	10,230	4,690	530	2,220	250	SB045XP0*RBC
39	0.48	0.218	2,340	10,410	1,510	6,720	5,860	26,070	2,920	12,990	5,710	650	2,850	320	SC045XP0*RBC
30	0.88	0.399	3,420	15,210	2,454	10,920	8,550	38,030	5,080	22,600	8,550	970	5,080	570	SD045XP0*RBC
21	2.10	0.953	5,930	26,380	4,923	21,900	14,810	65,880	9,180	40,830	15,550	1,760	9,695	1,100	SF045XP0*RBC
16	4.00	1.814	8,760	38,970	8,205	36,500	21,890	97,370	15,820	70,370	24,080	2,720	17,400	1,970	SG045XP0*RBC
60	0.23	0.104	1,520	6,760	834	3,710	3,790	16,860	1,650	7,340	3,790	430	1,650	190	SA047XP0*RBC
50	0.34	0.154	2,030	9,030	1,193	5,310	5,080	22,600	2,310	10,280	5,140	580	2,340	260	SB047XP0*RBC
41	0.50	0.227	2,460	10,940	1,556	6,920	6,160	27,400	2,970	13,210	6,320	710	3,040	340	SC047XP0*RBC
31	0.94	0.426	3,530	15,700	2,496	11,100	8,840	39,320	5,130	22,820	9,280	1,050	5,380	610	SD047XP0*RBC
22	2.20	0.998	6,210	27,620	5,048	22,450	15,520	69,040	9,380	41,720	17,070	1,930	10,416	1,180	SF047XP0*RBC
17	4.10	1.860	9,300	41,370	8,487	37,750	23,260	103,470	16,470	73,260	26,740	3,020	18,940	2,140	SG047XP0*RBC
63	0.24	0.109	1,590	7,070	859	3,820	3,980	17,700	1,680	7,470	4,180	470	1,760	200	SA050XP0*RBC
53	0.38	0.172	2,150	9,560	1,236	5,500	5,380	23,930	2,380	10,590	5,720	650	2,520	280	SB050XP0*RBC
43	0.58	0.263	2,590	11,520	1,600	7,120	6,460	28,740	3,040	13,520	6,950	790	3,270	370	SC050XP0*RBC
33	1.00	0.454	3,760	16,730	2,592	11,530	9,410	41,860	5,270	23,440	10,350	1,170	5,800	660	SD050XP0*RBC
23	2.30	1.043	6,490	28,870	5,172	23,010	16,220	72,150	9,520	42,350	18,660	2,110	11,157	1,260	SF050XP0*RBC
18	4.30	1.950	9,850	43,810	8,762	38,980	24,620	109,520	17,110	76,110	29,550	3,340	20,530	2,320	SG050XP0*RBC
69	0.25	0.113	1,750	7,780	908	4,040	4,360	19,390	1,720	7,650	5,020	570	1,970	220	SA055XP0*RBC
58	0.41	0.186	2,360	10,500	1,304	5,800	5,890	26,200	2,460	10,940	6,850	770	2,860	320	SB055XP0*RBC
47	0.59	0.268	2,830	12,590	1,687	7,500	7,060	31,400	3,120	13,880	8,300	940	3,717	420	SC055XP0*RBC
36	1.06	0.481	4,100	18,240	2,725	12,120	10,260	45,640	5,450	24,240	12,310	1,390	6,540	740	SD055XP0*RBC
25	2.50	1.134	7,050	31,360	5,415	24,090	17,630	78,420	9,820	43,680	22,040	2,490	12,696	1,430	SF055XP0*RBC

Refer to the Engineering section for load and speed limitations.

4-POINT CONTACT, X-TYPE

THIN SECTION BALL BEARINGS

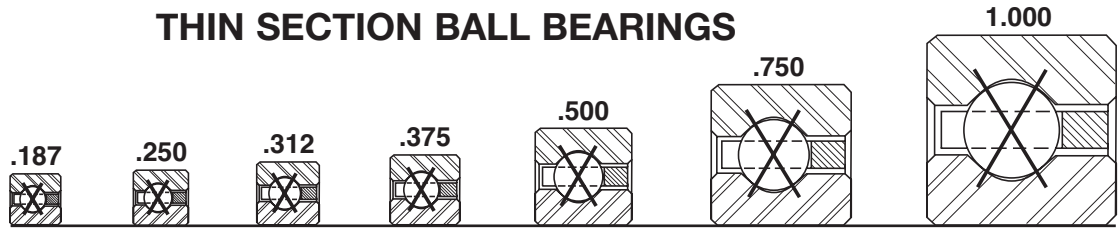

Series:	SAA	SA	SB	SC	SD	SF	SG
Cross Section Size:	3/16"	1/4"	5/16"	3/8"	1/2"	3/4"	1"

PART NUMBER*	NOMINAL DIMENSIONS												
	B Bore		D Outside Diameter		W Width		Land Diameter L_i -Inner Ring		Land Diameter L_o -Outer Ring		f_1 Housing Fillet		Ball Diameter
	in.	mm	in.	mm	in.	mm	in.	mm	in.	mm	in.	mm	in.
SG055XP0*RBC	5.5000	139.700	7.5000	190.500	1.0000	25.400	6.250	158.75	6.750	171.45	0.080	2.03	1/2
SA060XP0*RBC	6.0000	152.400	6.5000	165.100	0.2500	6.350	6.188	157.18	6.313	160.35	0.025	0.64	1/8
SB060XP0*RBC	6.0000	152.400	6.6250	168.275	0.3125	7.938	6.234	158.34	6.391	162.33	0.032	0.81	5/32
SC060XP0*RBC	6.0000	152.400	6.7500	171.450	0.3750	9.525	6.281	159.54	6.469	164.31	0.040	1.02	3/16
SD060XP0*RBC	6.0000	152.400	7.0000	177.800	0.5000	12.700	6.375	161.93	6.625	168.28	0.060	1.52	1/4
SF060XP0*RBC	6.0000	152.400	7.5000	190.500	0.7500	19.050	6.563	166.70	6.938	176.23	0.080	2.03	3/8
SG060XP0*RBC	6.0000	152.400	8.0000	203.200	1.0000	25.400	6.750	171.45	7.250	184.15	0.080	2.03	1/2
SA065XP0*RBC	6.5000	165.100	7.0000	177.800	0.2500	6.350	6.688	169.88	6.813	173.05	0.025	0.64	1/8
SB065XP0*RBC	6.5000	165.100	7.1250	180.975	0.3125	7.938	6.734	171.04	6.891	175.03	0.032	0.81	5/32
SC065XP0*RBC	6.5000	165.100	7.2500	184.150	0.3750	9.525	6.781	172.24	6.969	177.01	0.040	1.02	3/16
SD065XP0*RBC	6.5000	165.100	7.5000	190.500	0.5000	12.700	6.875	174.63	7.125	180.98	0.060	1.52	1/4
SF065XP0*RBC	6.5000	165.100	8.0000	203.200	0.7500	19.050	7.063	179.40	7.438	188.93	0.080	2.03	3/8
SG065XP0*RBC	6.5000	165.100	8.5000	215.900	1.0000	25.400	7.250	184.15	7.750	196.85	0.080	2.03	1/2
SA070XP0*RBC	7.0000	177.800	7.5000	190.500	0.2500	6.350	7.188	182.58	7.313	185.75	0.025	0.64	1/8
SB070XP0*RBC	7.0000	177.800	7.6250	193.675	0.3125	7.938	7.234	183.74	7.391	187.73	0.032	0.81	5/32
SC070XP0*RBC	7.0000	177.800	7.7500	196.850	0.3750	9.525	7.281	184.94	7.469	189.71	0.040	1.02	3/16
SD070XP0*RBC	7.0000	177.800	8.0000	203.200	0.5000	12.700	7.375	187.33	7.625	193.68	0.060	1.52	1/4
SF070XP0*RBC	7.0000	177.800	8.5000	215.900	0.7500	19.050	7.563	192.10	7.938	201.63	0.080	2.03	3/8
SG070XP0*RBC	7.0000	177.800	9.0000	228.600	1.0000	25.400	7.750	196.85	8.250	209.55	0.080	2.03	1/2
SA075XP0*RBC	7.5000	190.500	8.0000	203.200	0.2500	6.350	7.688	195.28	7.813	198.45	0.025	0.64	1/8
SB075XP0*RBC	7.5000	190.500	8.1250	206.375	0.3125	7.938	7.734	196.44	7.891	200.43	0.032	0.81	5/32
SC075XP0*RBC	7.5000	190.500	8.2500	209.550	0.3750	9.525	7.781	197.64	7.969	202.41	0.040	1.02	3/16
SD075XP0*RBC	7.5000	190.500	8.5000	215.900	0.5000	12.700	7.875	200.03	8.125	206.38	0.060	1.52	1/4
SF075XP0*RBC	7.5000	190.500	9.0000	228.600	0.7500	19.050	8.063	204.80	8.438	214.33	0.080	2.03	3/8
SG075XP0*RBC	7.5000	190.500	9.5000	241.300	1.0000	25.400	8.250	209.55	8.750	222.25	0.080	2.03	1/2
SA080XP0*RBC	8.0000	203.200	8.5000	215.900	0.2500	6.350	8.188	207.98	8.313	211.15	0.025	0.64	1/8
SB080XP0*RBC	8.0000	203.200	8.6250	219.075	0.3125	7.938	8.234	209.14	8.391	213.13	0.032	0.81	5/32
SC080XP0*RBC	8.0000	203.200	8.7500	222.250	0.3750	9.525	8.281	210.34	8.469	215.11	0.040	1.02	3/16
SD080XP0*RBC	8.0000	203.200	9.0000	228.600	0.5000	12.700	8.375	212.73	8.625	219.08	0.060	1.52	1/4
SF080XP0*RBC	8.0000	203.200	9.5000	241.300	0.7500	19.050	8.563	217.50	8.938	227.03	0.080	2.03	3/8
SG080XP0*RBC	8.0000	203.200	10.0000	254.000	1.0000	25.400	8.750	222.25	9.250	234.95	0.080	2.03	1/2
SA090XP0*RBC	9.0000	228.600	9.5000	241.300	0.2500	6.350	9.188	233.38	9.313	236.55	0.025	0.64	1/8
SB090XP0*RBC	9.0000	228.600	9.6250	244.475	0.3125	7.938	9.234	234.54	9.391	238.53	0.032	0.81	5/32
SC090XP0*RBC	9.0000	228.600	9.7500	247.650	0.3750	9.525	9.281	235.74	9.469	240.51	0.040	1.02	3/16
SD090XP0*RBC	9.0000	228.600	10.0000	254.000	0.5000	12.700	9.375	238.13	9.625	244.48	0.060	1.52	1/4
SF090XP0*RBC	9.0000	228.600	10.5000	266.700	0.7500	19.050	9.563	242.90	9.938	252.43	0.080	2.03	3/8
SG090XP0*RBC	9.0000	228.600	11.0000	279.400	1.0000	25.400	9.750	247.65	10.250	260.35	0.080	2.03	1/2
SA100XP0*RBC	10.0000	254.000	10.5000	266.700	0.2500	6.350	10.188	258.78	10.313	261.95	0.025	0.64	1/8
SB100XP0*RBC	10.0000	254.000	10.6250	269.875	0.3125	7.938	10.234	259.94	10.391	263.93	0.032	0.81	5/32
SC100XP0*RBC	10.0000	254.000	10.7500	273.050	0.3750	9.525	10.281	261.14	10.469	265.91	0.040	1.02	3/16
SD100XP0*RBC	10.0000	254.000	11.0000	279.400	0.5000	12.700	10.375	263.53	10.625	269.88	0.060	1.52	1/4
SF100XP0*RBC	10.0000	254.000	11.5000	292.100	0.7500	19.050	10.563	268.30	10.938	277.83	0.080	2.03	3/8
SG100XP0*RBC	10.0000	254.000	12.0000	304.800	1.0000	25.400	10.750	273.05	11.250	285.75	0.080	2.03	1/2

*The alphanumeric identification system is used under license.

- 440C Stainless Steel
- Large Diameter
- Light Weight
- Small Cross Section
- Snap-Over Ball Separator

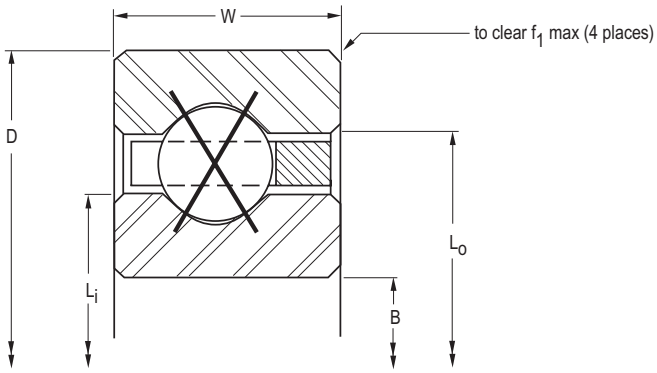

Ball Quantity	Approx. Weight		LOAD RATINGS												PART NUMBER*
			Radial				Thrust				Moment				
			Static		Dynamic		Static		Dynamic		Static		Dynamic		
	lbs.	kg	lbf	N	lbf	N	lbf	N	lbf	N	lbf - in	Nm	lbf - in	Nm	
19	4.70	2.132	10,400	46,260	8,979	39,940	25,990	115,610	17,460	77,670	33,790	3,820	22,700	2,560	SG055XP0*RBC
75	0.28	0.127	1,900	8,450	955	4,250	4,740	21,080	1,780	7,920	5,930	670	2,240	250	SA060XP0*RBC
63	0.44	0.200	2,560	11,390	1,371	6,100	6,400	28,470	2,540	11,300	8,080	910	3,247	370	SB060XP0*RBC
51	0.63	0.286	3,070	13,660	1,770	7,870	7,660	34,070	3,220	14,320	9,770	1,100	4,234	480	SC060XP0*RBC
39	1.16	0.526	4,450	19,790	2,855	12,700	11,120	49,460	5,610	24,950	14,450	1,630	7,290	820	SD060XP0*RBC
27	2.70	1.225	7,620	33,900	5,651	25,140	19,050	84,740	10,150	45,150	25,710	2,900	14,311	1,620	SF060XP0*RBC
21	5.10	2.313	11,490	51,110	9,503	42,270	28,730	127,800	18,290	81,360	40,220	4,540	25,610	2,890	SG060XP0*RBC
81	0.30	0.136	2,050	9,120	1,001	4,450	5,120	22,770	1,840	8,180	6,910	780	2,535	290	SA065XP0*RBC
68	0.47	0.213	2,760	12,280	1,435	6,380	6,910	30,740	2,590	11,520	9,410	1,060	3,668	410	SB065XP0*RBC
55	0.68	0.308	3,310	14,720	1,851	8,230	8,270	36,790	3,300	14,680	11,370	1,280	4,775	540	SC065XP0*RBC
42	1.22	0.553	4,790	21,310	2,980	13,260	11,970	53,250	5,740	25,530	16,760	1,890	8,040	910	SD065XP0*RBC
29	2.90	1.315	8,180	36,390	5,880	26,160	20,460	91,010	10,380	46,170	29,660	3,350	15,993	1,810	SF065XP0*RBC
22	5.40	2.449	12,040	53,560	9,713	43,210	30,100	133,890	18,520	82,380	45,140	5,100	27,770	3,140	SG065XP0*RBC
87	0.31	0.141	2,200	9,790	1,046	4,650	5,500	24,470	1,850	8,230	7,980	900	2,844	320	SA070XP0*RBC
73	0.50	0.227	2,970	13,210	1,498	6,660	7,420	33,010	2,660	11,830	10,850	1,230	4,109	460	SB070XP0*RBC
59	0.73	0.331	3,550	15,790	1,931	8,590	8,870	39,460	3,420	15,210	13,080	1,480	5,341	600	SC070XP0*RBC
45	1.31	0.594	5,130	22,820	3,103	13,800	12,830	57,070	5,880	26,160	19,240	2,170	8,810	1,000	SD070XP0*RBC
31	3.20	1.451	8,750	38,920	6,103	27,150	21,870	97,280	10,640	47,330	33,890	3,830	17,744	2,000	SF070XP0*RBC
24	5.80	2.631	13,130	58,410	10,208	45,410	32,830	146,040	19,330	85,980	52,530	5,940	30,930	3,490	SG070XP0*RBC
93	0.34	0.154	2,350	10,450	1,089	4,840	5,880	26,160	1,890	8,410	9,120	1,030	3,165	360	SA075XP0*RBC
78	0.53	0.240	3,170	14,100	1,559	6,930	7,920	35,230	2,730	12,140	12,380	1,400	4,568	520	SB075XP0*RBC
63	0.78	0.354	3,790	16,860	2,007	8,930	9,470	42,120	3,480	15,480	14,910	1,680	5,930	670	SC075XP0*RBC
48	1.41	0.640	5,470	24,330	3,222	14,330	13,680	60,850	6,060	26,960	21,890	2,470	9,700	1,100	SD075XP0*RBC
33	3.40	1.542	9,310	41,410	6,323	28,130	23,280	103,550	10,930	48,620	38,410	4,340	19,568	2,210	SF075XP0*RBC
25	6.10	2.767	13,680	60,850	10,410	46,310	34,200	152,130	19,460	86,560	58,140	6,570	33,196	3,750	SG075XP0*RBC
99	0.38	0.172	2,500	11,120	1,131	5,030	6,260	27,850	1,970	8,760	10,330	1,170	3,499	400	SA080XP0*RBC
83	0.57	0.259	3,370	14,990	1,618	7,200	8,430	37,500	2,790	12,410	14,020	1,580	5,045	570	SB080XP0*RBC
67	0.84	0.381	4,030	17,930	2,082	9,260	10,070	44,790	3,560	15,840	16,870	1,910	6,542	740	SC080XP0*RBC
51	1.53	0.694	5,810	25,840	3,338	14,850	14,540	64,680	6,170	27,450	24,710	2,790	10,643	1,200	SD080XP0*RBC
35	3.50	1.588	9,880	43,950	6,535	29,070	24,690	109,830	11,190	49,780	43,200	4,880	21,453	2,420	SF080XP0*RBC
27	6.50	2.948	14,770	65,700	10,882	48,410	36,940	164,320	20,230	89,990	66,480	7,510	36,743	4,150	SG080XP0*RBC
111	0.44	0.200	2,810	12,500	1,212	5,390	7,020	31,230	2,040	9,070	12,990	1,470	4,204	470	SA090XP0*RBC
93	0.66	0.299	3,780	16,810	1,732	7,700	9,450	42,040	2,890	12,860	17,600	1,990	6,050	680	SB090XP0*RBC
75	0.94	0.426	4,510	20,060	2,226	9,900	11,270	50,130	3,690	16,410	21,130	2,390	7,830	880	SC090XP0*RBC
57	1.72	0.780	6,500	28,910	3,561	15,840	16,250	72,280	6,410	28,510	30,870	3,490	12,693	1,430	SD090XP0*RBC
39	3.90	1.769	11,000	48,930	6,947	30,900	27,510	122,370	11,630	51,730	53,640	6,060	25,410	2,870	SF090XP0*RBC
30	7.20	3.266	16,420	73,040	11,526	51,270	41,040	182,560	21,020	93,500	82,080	9,270	43,240	4,890	SG090XP0*RBC
123	0.50	0.227	3,110	13,830	1,289	5,730	7,780	34,610	2,180	9,700	15,940	1,800	4,956	560	SA100XP0*RBC
103	0.73	0.331	4,190	18,640	1,841	8,190	10,460	46,530	3,080	13,700	21,580	2,440	7,121	800	SB100XP0*RBC
83	1.06	0.481	4,990	22,200	2,364	10,520	12,470	55,470	3,930	17,480	25,880	2,920	9,201	1,040	SC100XP0*RBC
63	1.88	0.853	7,180	31,940	3,776	16,800	17,960	79,890	6,680	29,710	37,710	4,260	14,872	1,680	SD100XP0*RBC
43	4.30	1.950	12,130	53,960	7,342	32,660	30,330	134,910	12,100	53,820	65,210	7,370	29,608	3,350	SF100XP0*RBC
33	7.90	3.583	18,060	80,330	12,147	54,030	45,140	200,790	21,790	96,930	99,320	11,220	50,124	5,660	SG100XP0*RBC

Refer to the Engineering section for load and speed limitations.

4-POINT CONTACT, X-TYPE

THIN SECTION BALL BEARINGS

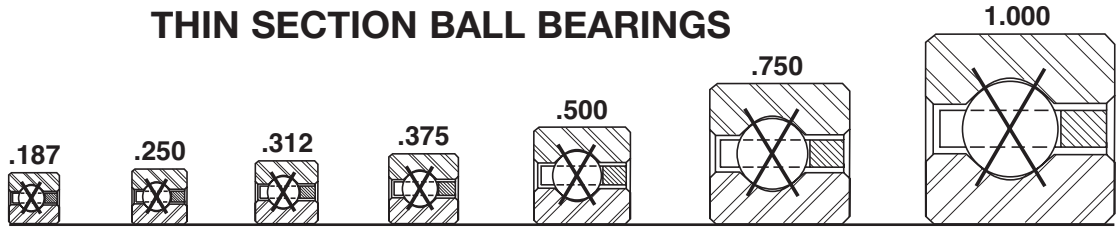

Series:	SAA	SA	SB	SC	SD	SF	SG
Cross Section Size:	3/16"	1/4"	5/16"	3/8"	1/2"	3/4"	1"

PART NUMBER*	NOMINAL DIMENSIONS												
	B Bore		D Outside Diameter		W Width		Land Diameter L_i -Inner Ring		Land Diameter L_o -Outer Ring		f_1 Housing Fillet		Ball Diameter
	in.	mm	in.	mm	in.	mm	in.	mm	in.	mm	in.	mm	in.
SA110XP0*RBC	11.0000	279.400	11.5000	292.100	0.2500	6.350	11.188	284.18	11.313	287.35	0.025	0.64	1/8
SB110XP0*RBC	11.0000	279.400	11.6250	295.275	0.3125	7.938	11.234	285.34	11.391	289.33	0.032	0.81	5/32
SC110XP0*RBC	11.0000	279.400	11.7500	298.450	0.3750	9.525	11.281	286.54	11.469	291.31	0.040	1.02	3/16
SD110XP0*RBC	11.0000	279.400	12.0000	304.800	0.5000	12.700	11.375	288.93	11.625	295.28	0.060	1.52	1/4
SF110XP0*RBC	11.0000	279.400	12.5000	317.500	0.7500	19.050	11.563	293.70	11.938	303.23	0.080	2.03	3/8
SG110XP0*RBC	11.0000	279.400	13.0000	330.200	1.0000	25.400	11.750	298.45	12.250	311.15	0.080	2.03	1/2
SA120XP0*RBC	12.0000	304.800	12.5000	317.500	0.2500	6.350	12.188	309.58	12.313	312.75	0.025	0.64	1/8
SB120XP0*RBC	12.0000	304.800	12.6250	320.675	0.3125	7.938	12.234	310.74	12.391	314.73	0.032	0.81	5/32
SC120XP0*RBC	12.0000	304.800	12.7500	323.850	0.3750	9.525	12.281	311.94	12.469	316.71	0.040	1.02	3/16
SD120XP0*RBC	12.0000	304.800	13.0000	330.200	0.5000	12.700	12.375	314.33	12.625	320.68	0.060	1.52	1/4
SF120XP0*RBC	12.0000	304.800	13.5000	342.900	0.7500	19.050	12.563	319.10	12.938	328.63	0.080	2.03	3/8
SG120XP0*RBC	12.0000	304.800	14.0000	355.600	1.0000	25.400	12.750	323.85	13.250	336.55	0.080	2.03	1/2
SB140XP0*RBC	14.0000	355.600	14.6250	371.475	0.3125	7.938	14.234	361.54	14.391	365.53	0.032	0.81	5/32
SC140XP0*RBC	14.0000	355.600	14.7500	374.650	0.3750	9.525	14.281	362.74	14.469	367.51	0.040	1.02	3/16
SD140XP0*RBC	14.0000	355.600	15.0000	381.000	0.5000	12.700	14.375	365.13	14.625	371.48	0.060	1.52	1/4
SF140XP0*RBC	14.0000	355.600	15.5000	393.700	0.7500	19.050	14.563	369.90	14.938	379.43	0.080	2.03	3/8
SG140XP0*RBC	14.0000	355.600	16.0000	406.400	1.0000	25.400	14.750	374.65	15.250	387.35	0.080	2.03	1/2
SB160XP0*RBC	16.0000	406.400	16.6250	422.275	0.3125	7.938	16.234	412.34	16.391	416.33	0.032	0.81	5/32
SC160XP0*RBC	16.0000	406.400	16.7500	425.450	0.3750	9.525	16.281	413.54	16.469	418.31	0.040	1.02	3/16
SD160XP0*RBC	16.0000	406.400	17.0000	431.800	0.5000	12.700	16.375	415.93	16.625	422.28	0.060	1.52	1/4
SF160XP0*RBC	16.0000	406.400	17.5000	444.500	0.7500	19.050	16.563	420.70	16.938	430.23	0.080	2.03	3/8
SG160XP0*RBC	16.0000	406.400	18.0000	457.200	1.0000	25.400	16.750	425.45	17.250	438.15	0.080	2.03	1/2
SB180XP0*RBC	18.0000	457.200	18.6250	473.075	0.3125	7.938	18.234	463.14	18.391	467.13	0.032	0.81	5/32
SC180XP0*RBC	18.0000	457.200	18.7500	476.250	0.3750	9.525	18.281	464.34	18.469	469.11	0.040	1.02	3/16
SD180XP0*RBC	18.0000	457.200	19.0000	482.600	0.5000	12.700	18.375	466.73	18.625	473.08	0.060	1.52	1/4
SF180XP0*RBC	18.0000	457.200	19.5000	495.300	0.7500	19.050	18.563	471.50	18.938	481.03	0.080	2.03	3/8
SG180XP0*RBC	18.0000	457.200	20.0000	508.000	1.0000	25.400	18.750	476.25	19.250	488.95	0.080	2.03	1/2
SB200XP0*RBC	20.0000	508.000	20.6250	523.875	0.3125	7.938	20.234	513.94	20.391	517.93	0.032	0.81	5/32
SC200XP0*RBC	20.0000	508.000	20.7500	527.050	0.3750	9.525	20.281	515.14	20.469	519.91	0.040	1.02	3/16
SD200XP0*RBC	20.0000	508.000	21.0000	533.400	0.5000	12.700	20.375	517.53	20.625	523.88	0.060	1.52	1/4
SF200XP0*RBC	20.0000	508.000	21.5000	546.100	0.7500	19.050	20.563	522.30	20.938	531.83	0.080	2.03	3/8
SG200XP0*RBC	20.0000	508.000	22.0000	558.800	1.0000	25.400	20.750	527.05	21.250	539.75	0.080	2.03	1/2
SC250XP0*RBC	25.0000	635.000	25.7500	654.050	0.3750	9.525	25.281	642.14	25.469	646.91	0.040	1.02	3/16
SD250XP0*RBC	25.0000	635.000	26.0000	660.400	0.5000	12.700	25.375	644.53	25.625	650.88	0.060	1.52	1/4
SF250XP0*RBC	25.0000	635.000	26.5000	673.100	0.7500	19.050	25.563	649.30	25.938	658.83	0.080	2.03	3/8
SG250XP0*RBC	25.0000	635.000	27.0000	685.800	1.0000	25.400	25.750	654.05	26.250	666.75	0.080	2.03	1/2
SC300XP0*RBC	30.0000	762.000	30.7500	781.050	0.3750	9.525	30.281	769.14	30.469	773.91	0.040	1.02	3/16
SD300XP0*RBC	30.0000	762.000	31.0000	787.400	0.5000	12.700	30.375	771.53	30.625	777.88	0.060	1.52	1/4
SF300XP0*RBC	30.0000	762.000	31.5000	800.100	0.7500	19.050	30.563	776.30	30.938	785.83	0.080	2.03	3/8
SG300XP0*RBC	30.0000	762.000	32.0000	812.800	1.0000	25.400	30.750	781.05	31.250	793.75	0.080	2.03	1/2
SF350XP0*RBC	35.0000	889.000	36.5000	927.100	0.7500	19.050	35.563	903.30	35.938	912.83	0.080	2.03	3/8
SG350XP0*RBC	35.0000	889.000	37.0000	939.800	1.0000	25.400	35.750	908.05	36.250	920.75	0.080	2.03	1/2
SF400XP0*RBC	40.0000	1016.000	41.5000	1054.100	0.7500	19.050	40.563	1030.30	40.938	1039.83	0.080	2.03	3/8
SG400XP0*RBC	40.0000	1016.000	42.0000	1066.800	1.0000	25.400	40.750	1035.05	41.250	1047.75	0.080	2.03	1/2

*The alphanumeric identification system is used under license.

- 440C Stainless Steel
- Large Diameter
- Light Weight
- Small Cross Section
- Snap-Over Ball Separator

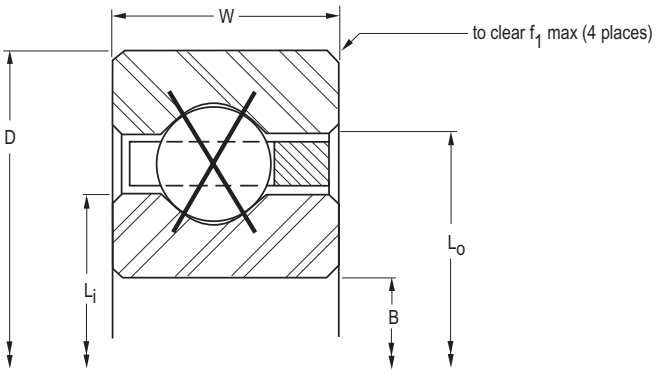

Ball Quantity	Approx. Weight		LOAD RATINGS												PART NUMBER*
			Radial				Thrust				Moment				
			Static		Dynamic		Static		Dynamic		Static		Dynamic		
	lbs.	kg	lbf	N	lbf	N	lbf	N	lbf	N	lbf - in	Nm	lbf - in	Nm	
135	0.52	0.236	3,410	15,170	1,362	6,060	8,540	37,990	2,320	10,320	19,210	2,170	5,750	650	SA110XP0*RBC
113	0.75	0.340	4,590	20,420	1,945	8,650	11,480	51,070	3,280	14,590	25,970	2,930	8,254	930	SB110XP0*RBC
91	1.16	0.526	5,470	24,330	2,496	11,100	13,680	60,850	4,180	18,590	31,110	3,510	10,651	1,200	SC110XP0*RBC
69	2.06	0.934	7,870	35,010	3,981	17,710	19,670	87,500	6,830	30,380	45,230	5,110	17,173	1,940	SD110XP0*RBC
47	4.80	2.177	13,260	58,980	7,721	34,340	33,150	147,460	12,490	55,560	77,910	8,800	34,032	3,850	SF110XP0*RBC
36	8.60	3.901	19,700	87,630	12,739	56,670	49,250	219,070	22,530	100,220	118,200	13,350	57,347	6,480	SG110XP0*RBC
147	0.56	0.254	3,720	16,550	1,433	6,370	9,300	41,370	2,450	10,900	22,770	2,570	6,587	740	SA120XP0*RBC
123	0.83	0.376	5,000	22,240	2,045	9,100	12,500	55,600	3,470	15,440	30,770	3,480	9,446	1,070	SB120XP0*RBC
99	1.25	0.567	5,950	26,470	2,622	11,660	14,880	66,190	4,420	19,660	36,830	4,160	12,174	1,380	SC120XP0*RBC
75	2.25	1.021	8,550	38,030	4,178	18,580	21,380	95,100	7,080	31,490	53,440	6,040	19,590	2,210	SD120XP0*RBC
51	5.20	2.359	14,390	64,010	8,084	35,960	35,970	160,000	13,190	58,670	91,730	10,360	38,666	4,370	SF120XP0*RBC
39	9.30	4.218	21,340	94,930	13,315	59,230	53,350	237,310	23,180	103,110	138,700	15,670	64,935	7,340	SG120XP0*RBC
143	1.05	0.476	5,810	25,840	2,234	9,940	14,530	64,630	3,840	17,080	41,580	4,700	11,994	1,360	SB140XP0*RBC
115	1.52	0.689	6,910	30,740	2,862	12,730	17,280	76,870	4,890	21,750	49,690	5,610	15,434	1,740	SC140XP0*RBC
87	2.73	1.238	9,920	44,130	4,551	20,240	24,800	110,320	7,670	34,120	71,910	8,120	24,755	2,800	SD140XP0*RBC
59	6.00	2.722	16,650	74,060	8,775	39,030	41,620	185,130	14,530	64,630	122,800	13,870	48,556	5,490	SF140XP0*RBC
45	10.80	4.899	24,620	109,520	14,404	64,070	61,560	273,830	24,300	108,090	184,700	20,870	81,056	9,160	SG140XP0*RBC
163	1.20	0.544	6,620	29,450	2,410	10,720	16,560	73,660	4,190	18,640	54,020	6,100	14,750	1,670	SB160XP0*RBC
131	1.73	0.785	7,880	35,050	3,086	13,730	19,690	87,590	5,330	23,710	64,480	7,290	18,955	2,140	SC160XP0*RBC
99	3.10	1.406	11,290	50,220	4,899	21,790	28,220	125,530	8,360	37,190	93,110	10,520	30,325	3,430	SD160XP0*RBC
67	7.10	3.221	18,900	84,070	9,421	41,910	47,260	210,220	15,820	70,370	158,300	17,890	59,200	6,690	SF160XP0*RBC
51	12.30	5.579	27,910	124,150	15,425	68,610	69,770	310,350	25,510	113,470	237,200	26,800	98,373	11,110	SG160XP0*RBC
183	1.35	0.612	7,440	33,090	2,576	11,460	18,590	82,690	4,520	20,110	68,090	7,690	17,694	2,000	SB180XP0*RBC
147	1.94	0.880	8,840	39,320	3,295	14,660	22,090	98,260	5,760	25,620	81,190	9,170	22,712	2,570	SC180XP0*RBC
111	3.48	1.579	12,650	56,270	5,226	23,250	31,640	140,740	9,030	40,170	117,000	13,220	36,268	4,100	SD180XP0*RBC
75	7.90	3.583	21,160	94,120	10,028	44,610	52,900	235,310	17,060	75,890	198,400	22,420	70,537	7,970	SF180XP0*RBC
57	13.70	6.214	31,190	138,740	16,386	72,890	77,980	346,870	27,410	121,930	296,300	33,480	116,793	13,200	SG180XP0*RBC
203	1.50	0.680	8,250	36,700	2,731	12,150	20,620	91,720	4,850	21,570	83,780	9,470	20,813	2,350	SB200XP0*RBC
163	2.16	0.980	9,800	43,590	3,492	15,530	24,500	108,980	6,170	27,450	99,830	11,280	26,695	3,020	SC200XP0*RBC
123	3.85	1.746	14,020	62,360	5,534	24,620	35,060	155,950	9,670	43,010	143,700	16,240	42,561	4,810	SD200XP0*RBC
83	8.90	4.037	23,420	104,180	10,602	47,160	58,550	260,440	18,250	81,180	243,000	27,460	82,528	9,320	SF200XP0*RBC
63	15.80	7.167	34,470	153,330	17,293	76,920	86,180	383,350	29,300	130,330	362,000	40,900	136,238	15,390	SG200XP0*RBC
203	2.69	1.220	12,200	54,270	3,941	17,530	30,510	135,720	7,140	31,760	154,800	17,490	37,518	4,240	SC250XP0*RBC
153	4.79	2.173	17,440	77,580	6,235	27,730	43,610	193,990	11,180	49,730	222,400	25,130	59,649	6,740	SD250XP0*RBC
103	10.90	4.944	29,060	129,270	11,909	52,970	72,650	323,160	21,070	93,720	374,200	42,280	115,037	13,000	SF250XP0*RBC
78	19.50	8.845	42,680	189,850	19,360	86,120	106,700	474,630	33,780	150,260	554,900	62,700	188,838	21,340	SG250XP0*RBC
243	3.21	1.456	14,610	64,990	4,338	19,300	36,520	162,450	8,050	35,810	221,900	25,070	49,436	5,590	SC300XP0*RBC
183	5.73	2.599	20,860	92,790	6,856	30,500	52,160	232,020	12,600	56,050	318,100	35,940	78,447	8,860	SD300XP0*RBC
123	13.00	5.897	34,700	154,350	13,065	58,120	86,760	385,930	23,720	105,510	533,600	60,290	150,708	17,030	SF300XP0*RBC
93	23.30	10.569	50,890	226,370	21,200	94,300	127,200	565,810	37,980	168,940	788,800	89,120	246,541	27,860	SG300XP0*RBC
143	15.10	6.849	40,350	179,490	14,100	62,720	100,900	448,830	26,220	116,630	721,200	81,480	189,106	21,370	SF350XP0*RBC
108	27.10	12.292	59,100	262,890	22,845	101,620	147,700	657,000	41,970	186,690	1,064,000	120,220	308,527	34,860	SG350XP0*RBC
163	17.20	7.802	45,990	204,570	15,034	66,870	115,000	511,550	28,620	127,310	937,100	105,880	229,832	25,970	SF400XP0*RBC
123	30.80	13.971	67,310	299,410	24,332	108,230	168,300	748,640	45,770	203,600	1,380,000	155,920	374,256	42,290	SG400XP0*RBC

Refer to the Engineering section for load and speed limitations.

SIMPLEX™ BEARING SERIES

SUPERDUPLEX™ SEALED BEARINGS

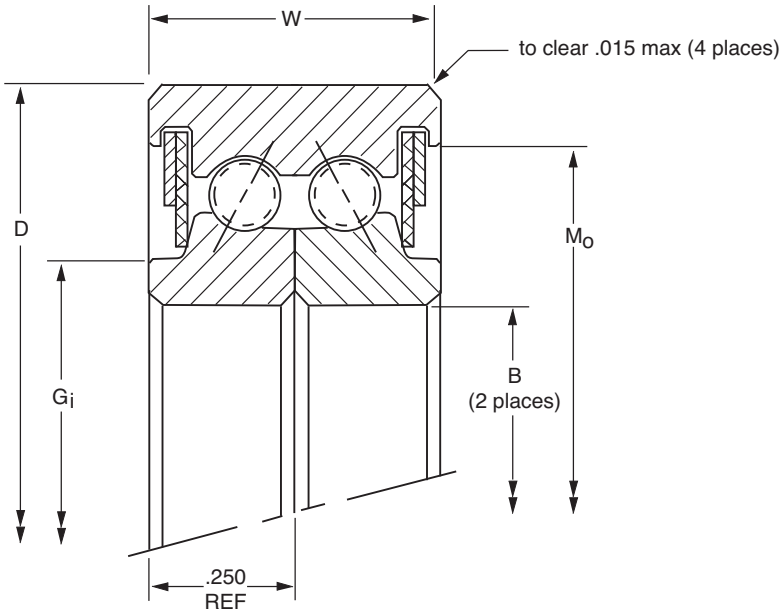

PART NUMBER*	NOMINAL DIMENSIONS											
	B Bore		D Outside Diameter		W Width		G_i Recess Diameter		M_o Groove Diameter		Ball Diameter	Ball Quantity
	in.	mm	in.	mm	in.	mm	in.	mm	in.	mm	in.	per row
ZU040MZ3*RBC	4.0000	101.600	4.7500	120.650	0.5000	12.700	4.155	105.54	4.550	115.57	1/8	54
ZU042MZ3*RBC	4.2500	107.950	5.0000	127.000	0.5000	12.700	4.405	111.89	4.800	121.92	1/8	57
ZU045MZ3*RBC	4.5000	114.300	5.2500	133.350	0.5000	12.700	4.655	118.24	5.050	128.27	1/8	60
ZU047MZ3*RBC	4.7500	120.650	5.5000	139.700	0.5000	12.700	4.905	124.59	5.300	134.62	1/8	63
ZU050MZ3*RBC	5.0000	127.000	5.7500	146.050	0.5000	12.700	5.155	130.94	5.550	140.97	1/8	66
ZU055MZ3*RBC	5.5000	139.700	6.2500	158.750	0.5000	12.700	5.655	143.64	6.050	153.67	1/8	72
ZU060MZ3*RBC	6.0000	152.400	6.7500	171.450	0.5000	12.700	6.155	156.34	6.550	166.37	1/8	79
ZU065MZ3*RBC	6.5000	165.100	7.2500	184.150	0.5000	12.700	6.655	169.04	7.050	179.07	1/8	85
ZU070MZ3*RBC	7.0000	177.800	7.7500	196.850	0.5000	12.700	7.155	181.74	7.550	191.77	1/8	91
ZU075MZ3*RBC	7.5000	190.500	8.2500	209.550	0.5000	12.700	7.655	194.44	8.050	204.47	1/8	97
ZU080MZ3*RBC	8.0000	203.200	8.7500	222.250	0.5000	12.700	8.155	207.14	8.550	217.17	1/8	104
ZU090MZ3*RBC	9.0000	228.600	9.7500	247.650	0.5000	12.700	9.155	232.54	9.550	242.57	1/8	116
ZU100MZ3*RBC	10.0000	254.000	10.7500	273.050	0.5000	12.700	10.155	257.94	10.550	267.97	1/8	129
ZU110MZ3*RBC	11.0000	279.400	11.7500	298.450	0.5000	12.700	11.155	283.34	11.550	293.37	1/8	141
ZU120MZ3*RBC	12.0000	304.800	12.7500	323.850	0.5000	12.700	12.155	308.74	12.550	318.77	1/8	154

*The alphanumeric identification system is used under license.
ZU Series are also available in low-torque design using PTFE seals.

Approx. Weight		LOAD RATINGS												PART NUMBER*
		Radial†				Thrust				Moment				
		Static		Dynamic		Static		Dynamic		Static		Dynamic		
lbs.	kg	lbf	N	lbf	N	lbf	N	lbf	N	lbf - in	Nm	lbf - in	Nm	
0.55	0.249	(2x) 905	(2x) 4,030	(2x) 640	(2x) 2,850	2,710	12,050	1,850	8,230	4,130	470	1,555	180	**ZU040MZ3*RBC**
0.58	0.263	(2x) 950	(2x) 4,230	(2x) 655	(2x) 2,910	2,850	12,680	1,900	8,450	4,540	510	1,670	190	**ZU042MZ3*RBC**
0.61	0.277	(2x) 995	(2x) 4,430	(2x) 660	(2x) 2,940	2,990	13,300	1,915	8,520	5,070	570	1,840	210	**ZU045MZ3*RBC**
0.65	0.295	(2x) 1,050	(2x) 4,670	(2x) 675	(2x) 3,000	3,140	13,970	1,955	8,700	5,575	630	1,990	220	**ZU047MZ3*RBC**
0.68	0.308	(2x) 1,090	(2x) 4,850	(2x) 685	(2x) 3,050	3,285	14,610	1,995	8,870	6,105	690	2,130	240	**ZU050MZ3*RBC**
0.74	0.336	(2x) 1,190	(2x) 5,290	(2x) 700	(2x) 3,110	3,580	15,920	2,035	9,050	7,235	820	2,450	280	**ZU055MZ3*RBC**
0.81	0.367	(2x) 1,305	(2x) 5,800	(2x) 730	(2x) 3,250	3,925	17,460	2,125	9,450	8,575	970	2,835	320	**ZU060MZ3*RBC**
0.87	0.395	(2x) 1,400	(2x) 6,230	(2x) 755	(2x) 3,360	4,210	18,730	2,185	9,720	9,910	1,120	3,200	360	**ZU065MZ3*RBC**
0.93	0.422	(2x) 1,500	(2x) 6,670	(2x) 760	(2x) 3,380	4,495	19,990	2,200	9,790	11,340	1,280	3,565	400	**ZU070MZ3*RBC**
0.99	0.449	(2x) 1,600	(2x) 7,120	(2x) 775	(2x) 3,450	4,780	21,260	2,250	10,010	12,870	1,450	3,950	450	**ZU075MZ3*RBC**
1.06	0.481	(2x) 1,710	(2x) 7,610	(2x) 815	(2x) 3,630	5,130	22,820	2,350	10,450	14,630	1,650	4,405	500	**ZU080MZ3*RBC**
1.18	0.535	(2x) 1,905	(2x) 8,470	(2x) 840	(2x) 3,740	5,705	25,380	2,420	10,760	18,180	2,050	5,275	600	**ZU090MZ3*RBC**
1.31	0.594	(2x) 2,110	(2x) 9,390	(2x) 875	(2x) 3,890	6,330	28,160	2,550	11,340	22,290	2,520	6,250	710	**ZU100MZ3*RBC**
1.43	0.649	(2x) 2,300	(2x) 10,230	(2x) 905	(2x) 4,030	6,915	30,760	2,625	11,680	26,620	3,010	7,235	820	**ZU110MZ3*RBC**
1.56	0.708	(2x) 2,515	(2x) 11,190	(2x) 935	(2x) 4,160	7,545	33,560	2,720	12,100	31,560	3,570	8,330	940	**ZU120MZ3*RBC**

†Radial load rating is two times the value per row ideally if both rows share load equally.
Refer to the Engineering section for load and speed limitations.

Y-PWI SERIES

TOLERANCE TABLES & RECOMMENDED FITS

- Mounted in duplex pairs
- Seal types as follows:
  1. Composition washer with synthetic rubber seal bonded to it.
  2. Synthetic rubber seal retained by composition washer.
  3. Synthetic rubber seal retained by cadmium plated spring steel or stainless steel washer.
- Exposed surfaces except bore are cadmium plated
- Prepacked with lubricant conforming to MIL-G-25537

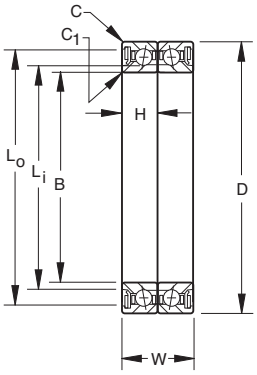

DIMENSIONS — TOLERANCES

Bearing Number	B Bore		D Outside Diameter		W Widths +.000" -.020" +.00mm -.51mm		H Widths +.000" -.005" +.00mm -.13mm		L_i Approx.		L_o Approx.		C_1(1) Inner Ring Radius		C(1) Outer Ring Radius		Balls No.	Balls Size	Weight (Ea. Bearing)		Type of Seal
	inch	mm	inch	mm	inch	mm	inch	mm	inch	mm	inch	mm	inch	mm	inch	mm			lbs.	kg	
Y64PWI-CR DB	4.0000	101.600	5.1250	130.175	1.250	31.75	.625	15.88	4.252	108.00	4.846	123.09	.031	0.79	.031	0.79	36	5/16	.97	.440	2
	3.9992	101.580	5.1242	130.155																	
Y80PWI-CR DB	5.0000	127.000	6.1250	155.575	1.250	31.75	.625	15.88	5.252	133.40	5.846	148.49	.031	0.79	.031	0.79	44	5/16	1.18	.535	2
	4.9992	126.975	6.1240	155.550																	
Y96PWI-CR DB	6.0000	152.400	7.1250	180.975	1.250	31.75	.625	15.88	6.252	158.80	6.846	173.89	.031	0.79	.031	0.79	52	5/16	1.39	.630	3
	5.9990	152.375	7.1240	180.950																	
Y128PWI-CR DB	8.0000	203.200	9.1250	231.775	1.250	31.75	.625	15.88	8.252	209.60	8.846	224.69	.031	0.79	.031	0.79	66	5/16	1.82	.826	3
	7.9988	203.170	9.1238	231.745																	
Y176PWI-CR DB	11.0000	279.400	12.500	317.500	1.500	38.10	.750	19.05	11.363	288.62	12.117	307.77	.031	0.79	.031	0.79	76	3/8	4.37	1.98	2
	10.9986	279.364	12.4984	317.460																	
Y224PWI-CR DB	14.0000	355.600	15.500	393.700	1.500	38.10	.750	19.05	14.363	364.82	15.117	383.97	.031	0.79	.031	0.79	95	3/8	5.81	2.64	2
	13.9984	355.559	15.4984	393.659																	
Y288PWI-2-MBR DB	18.0000	457.200	20.0000	508.000	2.000	50.80	1.000	25.40	18.500	469.90	19.500	495.30	.031	0.79	.031	0.79	92	1/2	13.20	5.99	1
	17.9983	457.157	19.9981	507.952																	

(1)Maximum shaft or housing fillet radius which bearing corners will clear.

LOAD RATINGS PER SET

Bearing Number	Radial Limit Load Rating		Thrust Limit Load Rating		Limit Moment Rating		Moment Constant		Rated Radial Capacity at Various RPM Based on 7500 Hours Average Life(2) 100rpm(3)		300rpm(3)		500rpm(3)		Nominal Preload	
	lbs.	N	lbs.	N	lb.-inch	N-cm	1/inch	1/cm	lbs.	N	lbs.	N	lbs.	N	lbs.	N
Y64PWI-CR DB	38500	170000	17500	78000	29700	335550	.589	.232	3480	15600	2410	10800	2030	9000	90	400
Y80PWI-CR DB	47300	212000	21500	95000	42100	475650	.511	.200	3770	16600	2610	11600	2200	9800	100	440
Y96PWI-CR DB	55800	250000	25400	112000	56800	641730	.447	.175	4030	18000	2800	12500	2360	10400	130	578
Y128PWI-CR DB	70900	315000	32200	143000	89100	1006652	.361	.142	4280	19000	2960	13200	2500	11200	160	711
Y176PWI-CR DB	117500	520000	53400	236000	199000	2248300	.268	.105	6180	27500	4280	19000	3610	16000	270	1200
Y224PWI-CR DB	147000	655000	66800	300000	302600	3418775	.221	.088	7090	31500	4920	22000	4140	18300	330	1468
Y288PWI-2-MBR DB	253000	1120000	115000	510000	1357500	15337000	.085	.033	10090	45000	7000	31000	5900	26000	575	2558

The limit load ratings shown apply only to Airframe Control position where bearings are used for oscillatory service.

Note: These bearings should not be used as track rollers, cam follower rolls, and the like.

Equivalent Radial Load = .52 x Radial Load + 1.91 x Thrust Load or = Radial Load, whichever is greater.

Pure Thrust Rating = .84 Radial Rating at operating speed.

(2)These ratings are for single bearings.

(3)Heavy line indicates limiting speeds recommended for sealed bearings; for higher speeds, seals should be removed.

For more information visit our web site at **rbcbearings.com**

THERMAL-COMP™ BEARINGS

THERMAL-COMP™ Bearings are custom designed to compensate for adverse effects of temperature extremes on bearing performance in airborne applications.

THERMAL-COMP™ Bearings have a double-split rings design and once properly installed in bearing support structure at ambient temperature, they will maintain steady and predictable stiffness and torque characteristics throughout a temperature range, regardless of differences in coefficient of thermal expansion (CTE) of the bearing and the support structure materials.

In most airborne systems, large azimuth bearings are installed in support structures (shaft and housing), which have to be made from light aluminum alloys in order to control weight. While conventional bearings may be installed and fitted for optimum stiffness and rotational torque at ambient temperature, significant variations in bearing performance will be experienced at extremes of temperature in actual application. Such variations are caused by differences in CTE of bearing materials (hardened steels) and the aluminum alloys used for the support structure. At one temperature extreme, the bearing will be internally over-loaded to a much higher stiffness and rolling friction torque; yet at another extreme, the bearing internal preload may be compromised resulting in loss of stiffness or excessive deflection. Such undesirable variations in conventional bearing performance at extremes of temperature will have to be carefully analyzed and consequences mitigated, often necessitating utilization of larger drive motors and/or using more expensive support structure alloys with CTE properties as close to bearing steel as possible. With **THERMAL-COMP™ Bearings** such uncertainties in performance are greatly reduced.

The following is a typical illustration of **THERMAL-COMP™ Bearings** manufactured at RBC-Industrial Tectonics Bearings. Note that the free-state gap in ring split is determined based on bearing size and application temperatures involved. The gap will be closed to near zero when the bearing is operating at the coldest temperature in the application. The gap will be slightly wider when bearing is operating at higher temperatures. However, bearing performance will remain consistent.

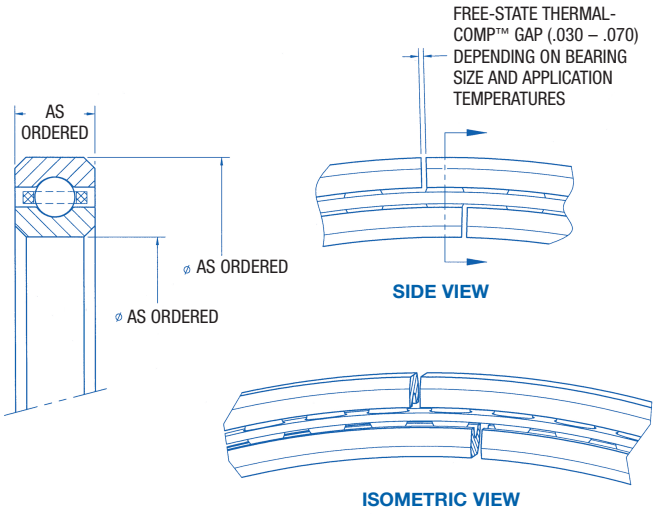

RBC THIN SECTION BALL BEARINGS

TOLERANCE TABLES & RECOMMENDED FITS

Precision Tolerances

The RBC Thin Section Ball Bearings shown in this catalog are manufactured to ABEC 1F precision tolerances. Where required, RBC thin section ball bearings can be manufactured to ABEC 3F, ABEC 5F and ABEC 7F precision tolerances.

RBC PRECISION CLASS 0

Values in 0.0001 inches, ( ):mm

Bearing Bore Size		ABEC 1F C-TYPE												
		Diameters		Race Runout Radial & Axial		Width	Radial Play Before Installation		Rotating Shaft		Stationaly Shaft			
		Bore	O.D.						Shaft O.D.	Housing I.D.	Shaft O.D.		Housing I.D.	
Over	Incl.	Nominal	Nominal	Inner Max	Outer Max	Nominal	Min	Max	Nominal	Nominal	Max	Min	Max	Min
	1.00 (25)	-4 (-0.010)	-5 (-0.013)	5 (0.013)	8 (0.020)	-50 (-0.127)	10 (0.025)	16 (0.041)	+4 (+0.010)	+5 (+0.013)	-4 (-0.010)	-8 (-0.020)	-5 (-0.013)	-10 (-0.025)
1.00 (25)	1.50 (38)	-5 (-0.013)	-5 (-0.013)	6 (0.015)	8 (0.020)	-50 (-0.127)	12 (0.030)	18 (0.046)	+4 (+0.010)	+5 (+0.013)	-5 (-0.013)	-10 (-0.025)	-5 (-0.013)	-10 (-0.025)
1.50 (38)	2.50 (64)	-6 (-0.015)	-5 (-0.013)	8 (0.020)	10 (0.025)	-50 (-0.127)	12 (0.030)	24 (0.061)	+6 (+0.015)	+5 (+0.013)	-6 (-0.015)	-12 (-0.030)	-5 (-0.013)	-10 (-0.025)
2.50 (64)	3.00 (76)	-6 (-0.015)	-6 (-0.015)	8 (0.020)	10 (0.025)	-50 (-0.127)	12 (0.030)	24 (0.061)	+6 (+0.015)	+6 (+0.015)	-6 (-0.015)	-12 (-0.030)	-6 (-0.015)	-12 (-0.030)
3.00 (76)	4.00 (102)	-8 (-0.020)	-6 (-0.015)	10 (0.025)	12 (0.030)	-50 (-0.127)	16 (0.041)	28 (0.071)	+8 (+0.020)	+6 (+0.015)	-8 (-0.020)	-16 (-0.041)	-6 (-0.015)	-12 (-0.030)
4.00 (102)	4.50 (114)	-8 (-0.020)	-8 (-0.020)	10 (0.025)	14 (0.036)	-50 (-0.127)	16 (0.041)	28 (0.071)	+8 (+0.020)	+8 (+0.020)	-8 (-0.020)	-16 (-0.041)	-8 (-0.020)	-16 (-0.041)
4.50 (114)	5.00 (127)	-10 (-0.025)	-8 (-0.020)	12 (0.030)	14 (0.036)	-50 (-0.127)	20 (0.051)	34 (0.086)	+10 (+0.025)	+8 (+0.020)	-10 (-0.025)	-20 (-0.051)	-8 (-0.020)	-16 (-0.041)
5.00 (127)	7.00 (178)	-10 (-0.025)	-10 (-0.025)	12 (0.030)	16 (0.041)	-50 (-0.127)	20 (0.051)	34 (0.086)	+10 (+0.025)	+10 (+0.025)	-10 (-0.025)	-20 (-0.051)	-10 (-0.025)	-20 (-0.051)
7.00 (178)	9.00 (229)	-12 (-0.030)	-12 (-0.030)	16 (0.041)	18 (0.046)	-50 (-0.127)	24 (0.061)	42 (0.107)	+12 (+0.030)	+12 (+0.030)	-12 (-0.030)	-24 (-0.061)	-12 (-0.030)	-24 (-0.061)
9.00 (229)	12.00 (305)	-14 (-0.036)	-14 (-0.036)	18 (0.046)	20 (0.051)	-50 (-0.127)	28 (0.071)	48 (0.122)	+14 (+0.036)	+14 (+0.036)	-14 (-0.036)	-28 (-0.071)	-14 (-0.036)	-28 (-0.071)
12.00 (305)	14.00 (356)	-16 (-0.041)	-16 (-0.041)	18 (0.046)	20 (0.051)	-100 (0.254)	32 (0.081)	52 (0.132)	+16 (+0.041)	+16 (+0.041)	-16 (-0.041)	-32 (-0.081)	-16 (-0.041)	-32 (-0.081)
14.00 (356)	16.00 (356)	-18 (-0.046)	-18 (-0.046)	18 (0.046)	20 (0.051)	-100 (0.254)	36 (0.091)	56 (0.142)	+18 (+0.046)	+18 (+0.046)	-18 (-0.046)	-36 (-0.091)	-18 (-0.046)	-36 (-0.091)
16.00 (406)	18.00 (457)	-18 (-0.046)	-18 (-0.046)	20 (0.051)	20 (0.051)	-100 (0.254)	36 (0.091)	56 (0.142)	+18 (+0.046)	+18 (+0.046)	-18 (-0.046)	-36 (-0.091)	-18 (-0.046)	-36 (-0.091)
18.00 (457)	20.00 (508)	-20 (-0.051)	-20 (-0.051)	20 (0.051)	20 (0.051)	-100 (0.254)	40 (0.102)	60 (0.152)	+20 (+0.051)	+20 (+0.051)	-20 (-0.051)	-40 (-0.102)	-20 (-0.051)	-40 (-0.102)
20.00 (508)	30.00 (762)	-30 (-0.076)	-30 (-0.076)	20 (0.051)	20 (0.051)	-100 (0.254)	60 (0.152)	80 (0.203)	+30 (+0.076)	+30 (+0.076)	-30 (-0.076)	-60 (-0.152)	-30 (-0.076)	-60 (-0.152)
30.00 (762)	40.00 (1016)	-40 (-0.102)	-40 (-0.102)	20 (0.051)	20 (0.051)	-100 (0.254)	80 (0.203)	100 (0.254)	+40 (+0.102)	+40 (+0.102)	-40 (-0.102)	-80 (-0.203)	-40 (-0.102)	-80 (-0.203)

Does not apply to bearings with preload.

DUPLEX PAIR WIDTH TOLERANCES

Values in 0.0001 inches

Bearing Bore Size		Width	
Over	Including	Max	Min
	2.00 (5)	0 (0)	-200 (-0.508)
2.00 (51)	5.00 (127)	0 (0)	-300 (-0.762)
5.00 (127)	14.00 (356)	0 (0)	-400 (-1.016)
14.00 (356)	40.00 (1016)	0 (0)	-500 (-1.270)

ROTATING SHAFT

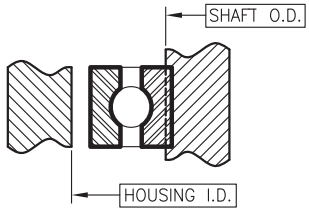

STATIONARY SHAFT

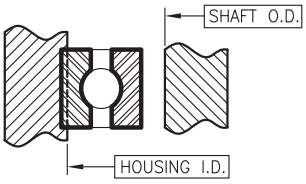

RBC THIN SECTION BALL BEARINGS

TOLERANCE TABLES & RECOMMENDED FITS

RBC PRECISION CLASS 0

Values in 0.0001 inches, ( ):mm

Bearing Bore Size		ABEC 1F A-TYPE & X-TYPE												
		Diameters		Race Runout Radial & Axial		Width	Radial Play Before Installation (X-Type Only)		Rotating Shaft		Stationaly Shaft			
		Bore Nominal	O.D. Nominal						Shaft O.D. Nominal	Housing I.D. Nominal	Shaft O.D.		Housing I.D.	
Over	Incl.			Inner Max	Outer Max	Nominal	Min	Max			Max	Min	Max	Min
	1.00 (25)	-4 (-0.010)	-5 (-0.013)	3 (0.008)	4 (0.010)	-50 (-0.127)	10 (0.025)	15 (0.038)	+4 (+0.010)	+5 (+0.013)	-4 (-0.010)	-8 (-0.020)	-5 (-0.013)	-10 (-0.025)
1.00 (25)	1.50 (38)	-5 (-0.013)	-5 (-0.013)	4 (0.010)	4 (0.010)	-50 (-0.127)	12 (0.030)	17 (0.043)	+5 (+0.013)	+5 (+0.013)	-5 (-0.013)	-10 (-0.025)	-5 (-0.013)	-10 (-0.025)
1.50 (38)	2.50 (64)	-6 (-0.015)	-5 (-0.013)	5 (0.013)	5 (0.013)	-50 (-0.127)	12 (0.030)	22 (0.056)	+6 (+0.015)	+5 (+0.013)	-6 (-0.015)	-12 (-0.030)	-5 (-0.013)	-10 (-0.025)
2.50 (64)	3.00 (76)	-6 (-0.015)	-6 (-0.015)	6 (0.015)	6 (0.015)	-50 (-0.127)	12 (0.030)	22 (0.056)	+6 (+0.015)	+6 (+0.015)	-6 (-0.015)	-12 (-0.030)	-6 (-0.015)	-12 (-0.030)
3.00 (76)	4.00 (102)	-8 (-0.020)	-6 (-0.015)	6 (0.015)	6 (0.015)	-50 (-0.127)	16 (0.041)	26 (0.066)	+8 (+0.020)	+6 (+0.015)	-8 (-0.020)	-16 (-0.041)	-6 (-0.015)	-12 (-0.030)
4.00 (102)	4.50 (114)	-8 (-0.020)	-8 (-0.020)	6 (0.015)	8 (0.020)	-50 (-0.127)	16 (0.041)	26 (0.066)	+8 (+0.020)	+8 (+0.020)	-8 (-0.020)	-16 (-0.041)	-8 (-0.020)	-16 (-0.041)
4.50 (114)	5.00 (127)	-10 (-0.025)	-8 (-0.020)	8 (0.020)	8 (0.020)	-50 (-0.127)	20 (0.051)	30 (0.076)	+10 (+0.025)	+10 (+0.025)	-10 (-0.025)	-20 (-0.051)	-8 (-0.020)	-16 (-0.041)
5.00 (127)	6.50 (165)	-10 (-0.025)	-10 (-0.025)	10 (0.025)	10 (0.025)	-50 (-0.127)	20 (0.051)	30 (0.076)	+10 (+0.025)	+12 (+0.030)	-10 (-0.025)	-20 (-0.051)	-10 (-0.025)	-20 (-0.051)
6.50 (165)	7.00 (178)	-10 (-0.025)	-12 (-0.030)	10 (0.025)	10 (0.025)	-50 (-0.127)	20 (0.051)	30 (0.076)	+10 (+0.025)	+12 (+0.030)	-10 (-0.025)	-20 (-0.051)	-12 (-0.030)	-24 (-0.061)
7.00 (178)	9.00 (229)	-12 (-0.030)	-12 (-0.030)	12 (0.030)	12 (0.030)	-50 (-0.127)	24 (0.061)	34 (0.086)	+12 (+0.030)	+14 (+0.036)	-12 (-0.030)	-24 (-0.061)	-12 (-0.030)	-24 (-0.061)
9.00 (229)	12.00 (305)	-14 (-0.036)	-14 (-0.036)	14 (0.036)	14 (0.036)	-50 (-0.127)	28 (0.071)	38 (0.097)	+14 (+0.036)	+14 (+0.036)	-14 (-0.036)	-28 (-0.071)	-14 (-0.036)	-28 (-0.071)
12.00 (305)	14.00 (356)	-14 (-0.036)	-16 (-0.041)	14 (0.036)	14 (0.036)	-100 (0.254)	28 (0.071)	38 (0.09)	+14 (+0.036)	+16 (+0.041)	-14 (-0.036)	-28 (-0.071)	-14 (-0.036)	-28 (-0.071)
14.00 (356)	18.00 (457)	-16 (-0.041)	-16 (-0.041)	16 (0.041)	16 (0.041)	-100 (0.254)	32 (0.081)	42 (0.107)	+16 (+0.041)	+18 (+0.046)	-16 (-0.041)	-32 (-0.081)	-16 (-0.041)	-32 (-0.081)
18.00 (457)	30.00 (762)	-18 (-0.046)	-18 (-0.046)	18 (0.046)	18 (0.046)	-100 (0.254)	36 (0.091)	46 (0.117)	+18 (+0.046)	+18 (+0.046)	-18 (-0.046)	-36 (-0.091)	-18 (-0.046)	-36 (-0.091)
30.00 (762)	40.00 (1016)	-20 (-0.051)	-20 (-0.051)	20 (0.051)	20 (0.051)	-100 (0.254)	40 (0.102)	50 (0.127)	+20 (+0.051)	+20 (+0.051)	-20 (-0.051)	-40 (-0.102)	-20 (-0.051)	-40 (-0.102)

Does not apply to bearings with preload.

RBC PRECISION CLASS 3

Values in 0.0001 inches, ( ):mm

Bearing Bore Size		ABEC 3F ALL TYPES												
		Diameters		Race Runout Radial & Axial		Width	Radial Play Before Installation (C & X-Type Only)		Rotating Shaft		Stationaly Shaft			
		Bore Nominal	O.D. Nominal						Shaft O.D. Nominal	Housing I.D. Nominal	Shaft O.D.		Housing I.D.	
Over	Incl.			Inner Max	Outer Max	Nominal	Min	Max			Max	Min	Max	Min
	1.00 (25)	-2 (-0.005)	-3 (-0.008)	3 (0.008)	4 (0.010)	-50 (-0.127)	7 (0.018)	11 (0.028)	+2 (+0.005)	+3 (+0.008)	-2 (-0.005)	-4 (-0.010)	-3 (-0.008)	-6 (-0.015)
1.00 (25)	1.50 (38)	-3 (-0.008)	-3 (-0.008)	4 (0.010)	4 (0.010)	-50 (-0.127)	8 (0.020)	12 (0.030)	+3 (+0.008)	+3 (+0.008)	-3 (-0.008)	-6 (-0.015)	-3 (-0.008)	-6 (-0.015)
1.50 (38)	2.50 (64)	-4 (-0.010)	-4 (-0.010)	4 (0.010)	5 (0.013)	-50 (-0.127)	8 (0.020)	18 (0.046)	+4 (+0.010)	+4 (+0.010)	-4 (-0.010)	-8 (-0.020)	-4 (-0.010)	-8 (-0.020)
2.50 (64)	3.00 (76)	-4 (-0.010)	-4 (-0.010)	4 (0.010)	6 (0.015)	-50 (-0.127)	8 (0.020)	18 (0.046)	+4 (+0.010)	+4 (+0.010)	-4 (-0.010)	-8 (-0.020)	-4 (-0.010)	-8 (-0.020)
3.00 (76)	4.00 (102)	-5 (-0.013)	-4 (-0.010)	5 (0.013)	6 (0.015)	-50 (-0.127)	10 (0.025)	20 (0.051)	+5 (+0.013)	+4 (+0.010)	-5 (-0.013)	-10 (-0.025)	-4 (-0.010)	-8 (-0.020)
4.00 (102)	4.50 (114)	-5 (-0.013)	-5 (-0.013)	5 (0.013)	8 (0.020)	-50 (-0.127)	10 (0.025)	20 (0.051)	+5 (+0.013)	+5 (+0.013)	-5 (-0.013)	-10 (-0.025)	-5 (-0.013)	-10 (-0.025)
4.50 (114)	5.00 (127)	-6 (-0.015)	-5 (-0.013)	6 (0.015)	8 (0.020)	-50 (-0.127)	12 (0.030)	22 (0.056)	+6 (+0.015)	+5 (+0.013)	-6 (-0.015)	-12 (-0.030)	-5 (-0.013)	-10 (-0.025)
5.00 (127)	6.50 (165)	-6 (-0.015)	-6 (-0.015)	6 (0.015)	9 (0.023)	-50 (-0.127)	12 (0.030)	22 (0.056)	+6 (+0.015)	+6 (+0.015)	-6 (-0.015)	-12 (-0.030)	-6 (-0.015)	-12 (-0.030)
6.50 (165)	7.00 (178)	-6 (-0.015)	-7 (-0.018)	6 (0.015)	10 (0.025)	-50 (-0.127)	14 (0.036)	24 (0.061)	+6 (+0.015)	+7 (+0.015)	-6 (-0.015)	-12 (-0.030)	-7 (-0.018)	-14 (-0.036)
7.00 (178)	9.00 (229)	-7 (-0.018)	-7 (-0.018)	8 (0.020)	10 (0.025)	-50 (-0.127)	14 (0.036)	24 (0.061)	+7 (+0.015)	+7 (+0.015)	-7 (-0.018)	-14 (-0.036)	-7 (-0.018)	-14 (-0.036)
9.00 (229)	11.00 (279)	-8 (-0.020)	-8 (-0.020)	10 (0.025)	12 (0.030)	-50 (-0.127)	16 (0.041)	26 (0.066)	+8 (+0.020)	+8 (+0.020)	-8 (-0.020)	-16 (-0.041)	-8 (-0.020)	-16 (-0.041)
11.00 (279)	12.00 (305)	-8 (-0.020)	-9 (0.023)	10 (0.025)	14 (0.036)	-50 (-0.127)	18 (0.046)	28 (0.071)	+8 (+0.020)	+9 (+0.023)	-8 (-0.020)	-16 (-0.041)	-9 (-0.023)	-18 (-0.046)
12.00 (305)	14.00 (356)	-8 (-0.020)	-9 (0.023)	12 (0.030)	14 (0.036)	-100 (0.254)	18 (0.046)	28 (0.071)	+8 (+0.020)	+9 (+0.023)	-8 (-0.020)	-16 (-0.041)	-9 (-0.023)	-18 (-0.046)
14.00 (356)	18.00 (457)	-9 (-0.023)	-10 (-0.025)	14 (0.036)	16 (0.041)	-100 (0.254)	20 (0.051)	30 (0.076)	+9 (+0.023)	+10 (+0.025)	-9 (-0.023)	-18 (-0.046)	-10 (-0.025)	-20 (-0.051)
18.00 (457)	30.00 (762)	-10 (-0.025)	-12 (-0.030)	16 (0.041)	18 (0.046)	-100 (0.254)	24 (0.061)	34 (0.086)	+10 (+0.025)	+12 (+0.030)	-10 (-0.025)	-20 (-0.051)	-12 (-0.030)	-24 (-0.061)

Does not apply to bearings with preload.

RBC THIN SECTION BALL BEARINGS

TOLERANCE TABLES & RECOMMENDED FITS

RBC PRECISION CLASS 4

Values in 0.0001 inches, ( ):mm

Bearing Bore Size		ABEC 5F ALL TYPES												
		Diameters		Race Runout Radial & Axial		Width	Radial Play Before Installation (C & X-Type Only)		Rotating Shaft		Stationaly Shaft			
		Bore Nominal	O.D. Nominal						Shaft O.D.	Housing I.D.	Shaft O.D.		Housing I.D.	
Over	Incl.			Inner Max	Outer Max	Nominal	Min	Max	Nominal	Nominal	Max	Min	Max	Min
	1.50 (38)	-2 (-0.005)	-2 (-0.005)	2 (0.005)	2 (0.005)	3 (0.008)	3 (0.008)	-50 (-0.127)	5 (0.013)	9 (0.023)	+2 (+0.005)	-2 (-0.005)	-4 (-0.010)	-2 (-0.005)
1.50 (38)	2.50 (64)	-3 (-0.008)	-3 (-0.008)	2 (0.005)	3 (0.008)	3 (0.008)	4 (0.010)	-50 (-0.127)	5 (0.013)	9 (0.023)	+3 (+0.008)	-3 (-0.008)	-6 (-0.015)	-3 (-0.008)
2.50 (64)	3.00 (76)	-3 (-0.008)	-3 (-0.008)	2 (0.005)	4 (0.010)	3 (0.008)	5 (0.013)	-50 (-0.127)	6 (0.015)	12 (0.030)	+3 (+0.008)	-3 (-0.008)	-6 (-0.015)	-3 (-0.008)
3.00 (76)	4.00 (102)	-3 (-0.008)	-3 (-0.008)	3 (0.008)	4 (0.010)	4 (0.010)	5 (0.013)	-50 (-0.127)	6 (0.015)	12 (0.030)	+3 (+0.008)	-3 (-0.008)	-6 (-0.015)	-3 (-0.008)
4.00 (102)	4.50 (114)	-3 (-0.008)	-4 (-0.010)	3 (0.008)	4 (0.010)	4 (0.010)	5 (0.013)	-50 (-0.127)	8 (0.020)	14 (0.036)	+3 (+0.008)	-3 (-0.008)	-6 (-0.015)	-4 (-0.010)
4.50 (114)	5.00 (127)	-4 (-0.010)	-4 (-0.010)	3 (0.008)	4 (0.010)	4 (0.010)	5 (0.013)	-500 (-0.127)	8 (0.020)	14 (0.036)	+4 (+0.010)	-4 (-0.010)	-8 (-0.020)	-4 (-0.010)
5.00 (127)	7.00 (178)	-4 (-0.010)	-5 (-0.013)	3 (0.008)	5 (0.013)	4 (0.010)	6 (0.013)	-50 (-0.127)	10 (0.020)	16 (0.036)	+4 (+0.010)	-4 (-0.010)	-8 (-0.020)	-5 (-0.013)
7.00 (178)	9.00 (229)	-5 (-0.013)	-5 (-0.013)	4 (0.010)	5 (0.013)	5 (0.013)	6 (0.015)	-50 (-0.127)	10 (0.025)	16 (0.041)	+5 (+0.013)	-5 (-0.013)	-10 (-0.025)	-5 (-0.013)
9.00 (229)	11.00 (279)	-5 (-0.013)	-5 (-0.013)	5 (0.013)	6 (0.015)	6 (0.015)	7 (0.015)	-50 (-0.127)	10 (0.025)	16 (0.041)	+5 (+0.013)	-5 (-0.013)	-10 (-0.025)	-5 (-0.013)
11.00 (279)	12.00 (305)	-5 (-0.013)	-6 (-0.015)	5 (0.013)	7 (0.018)	6 (0.015)	8 (0.018)	-50 (-0.127)	12 (0.025)	18 (0.046)	+5 (+0.013)	-5 (-0.013)	-10 (-0.025)	-6 (-0.015)
12.00 (305)	14.00 (356)	-6 (-0.015)	-6 (-0.015)	5 (0.013)	7 (0.018)	7 (0.018)	8 (0.020)	-100 (-0.127)	12 (0.030)	18 (0.046)	+6 (+0.015)	-6 (-0.015)	-12 (-0.030)	-6 (-0.015)
14.00 (356)	18.00 (457)	-6 (-0.015)	-7 (-0.018)	7 (0.018)	8 (0.020)	8 (0.020)	9 (0.020)	-100 (-0.254)	14 (0.030)	20 (0.046)	+6 (+0.015)	-6 (-0.015)	-12 (-0.030)	-7 (-0.018)
18.00 (457)	20.00 (508)	-7 (-0.018)	-8 (-0.020)	8 (0.020)	9 (0.023)	9 (0.023)	10 (0.025)	-100 (-0.254)	14 (0.036)	22 (0.056)	+7 (+0.018)	-7 (-0.018)	-14 (-0.036)	-8 (-0.020)

Does not apply to bearings with preload.

RBC PRECISION CLASS 6

Values in 0.0001 inches, ( ):mm

Bearing Bore Size		ABEC 7F ALL TYPES												
		Diameters		Race Runout Radial & Axial		Width	Radial Play Before Installation (C & X-Type Only)		Rotating Shaft		Stationaly Shaft			
		Bore Nominal	O.D. Nominal						Shaft O.D.	Housing I.D.	Shaft O.D.		Housing I.D.	
Over	Incl.			Inner Max	Outer Max	Nominal	Min	Max	Nominal	Nominal	Max	Min	Max	Min
	1.00 (25)	-1.5 (-0.004)	-2 (-0.005)	1.5 (0.004)	2 (0.005)	-50 (-0.127)	4 (0.010)	8 (0.020)	+2 (+0.005)	+2 (+0.005)	-2 (-0.005)	-4 (-0.010)	-2 (-0.005)	-4 (-0.010)
1.00 (25)	2.50 (64)	-2 (-0.005)	-2 (-0.005)	2 (0.005)	2 (0.005)	-50 (-0.127)	5 (0.013)	10 (0.025)	+2 (+0.005)	+2 (+0.005)	-2 (-0.005)	-4 (-0.010)	-2 (-0.005)	-4 (-0.010)
2.50 (64)	3.00 (76)	-2 (-0.005)	-3 (-0.008)	2 (0.005)	2 (0.005)	-50 (-0.127)	6 (0.013)	12 (0.030)	+2 (+0.005)	+3 (+0.008)	-2 (-0.005)	-4 (-0.010)	-3 (-0.008)	-6 (-0.015)
3.00 (76)	4.00 (102)	-2.5 (-0.006)	-3 (-0.008)	2 (0.005)	2 (0.005)	-50 (-0.127)	6 (0.013)	12 (0.030)	+3 (+0.008)	+3 (+0.008)	-3 (-0.008)	-5 (-0.013)	-3 (-0.008)	-6 (-0.015)
4.00 (102)	4.50 (114)	-2.5 (-0.006)	-4 (-0.010)	2 (0.005)	3 (0.008)	-50 (-0.127)	8 (0.020)	14 (0.036)	+3 (+0.008)	+4 (+0.010)	-3 (-0.008)	-5 (-0.013)	-4 (-0.010)	-8 (-0.020)
4.50 (114)	6.50 (165)	-3 (-0.008)	-4 (-0.010)	3 (0.008)	3 (0.008)	-500 (-0.127)	8 (0.020)	14 (0.036)	+3 (+0.008)	+4 (+0.010)	-3 (-0.008)	-6 (-0.015)	-4 (-0.010)	-8 (-0.020)
6.50 (165)	7.00 (178)	-3 (-0.008)	-4 (-0.010)	3 (0.008)	4 (0.010)	-50 (-0.127)	8 (0.020)	14 (0.036)	+3 (+0.008)	+4 (+0.010)	-3 (-0.008)	-6 (-0.015)	-4 (-0.010)	-8 (-0.020)
7.00 (178)	9.00 (229)	-4 (-0.010)	-4 (-0.010)	3 (0.008)	4 (0.010)	-50 (-0.127)	8 (0.020)	14 (0.036)	+4 (+0.010)	+4 (+0.010)	-4 (-0.010)	-8 (-0.020)	-4 (-0.010)	-8 (-0.020)
9.00 (229)	11.00 (279)	-5 (-0.013)	-5 (-0.013)	4 (0.010)	4 (0.010)	-50 (-0.127)	10 (0.025)	16 (0.036)	+5 (+0.013)	+5 (+0.013)	-5 (-0.013)	-10 (-0.025)	-5 (-0.013)	-10 (-0.025)
11.00 (279)	12.00 (305)	-5 (-0.013)	-5 (-0.013)	4 (0.010)	5 (0.013)	-100 (-0.254)	10 (0.025)	16 (0.036)	+5 (+0.013)	+5 (+0.013)	-5 (-0.013)	-10 (-0.025)	-5 (-0.013)	-10 (-0.025)
12.00 (305)	14.00 (356)	-5 (-0.013)	-5 (-0.013)	4 (0.010)	5 (0.013)	-100 (-0.254)	12 (0.030)	18 (0.046)	+5 (+0.013)	+6 (+0.015)	-5 (-0.013)	-10 (-0.025)	-6 (-0.015)	-12 (-0.030)

Does not apply to bearings with preload.

ROTATING SHAFT

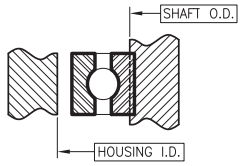

STATIONARY SHAFT

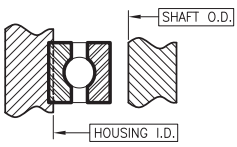

RBC THIN SECTION BALL BEARINGS

TOLERANCE TABLES & RECOMMENDED FITS FOR THIN DENSE CHROME COATED BEARINGS - N-SERIES

RBC PRECISION CLASS 0

Values in 0.0001 inches, ( ):mm

Bearing Bore Size		ABEC 1F A-TYPE & X- TYPE												
		Diameters		Race Runout Radial & Axial		Width	Radial Play Before Installation (X-Type Only)		Rotating Shaft		Stationaly Shaft			
		Bore Nominal	O.D. Nominal						Shaft O.D.	Housing I.D.	Shaft O.D.		Housing I.D.	
Over	Incl.			Inner Max	Outer Max	Nominal	Min	Max	Nominal	Nominal	Max	Min	Max	Min
	1.00 (25)	-6 (-0.015)	-7 (-0.018)	3 (0.008)	4 (0.010)	-50 (-0.127)	10 (0.025)	15 (0.038)	+6 (+0.015)	+7 (+0.018)	-6 (-0.015)	-12 (-0.030)	-7 (-0.018)	-14 (-0.036)
1.00 (25)	1.50 (38)	-7 (-0.018)	-7 (-0.018)	4 (0.010)	4 (0.010)	-50 (-0.127)	12 (0.030)	17 (0.043)	+7 (+0.018)	+7 (+0.018)	-7 (-0.018)	-14 (-0.036)	-7 (-0.018)	-14 (-0.036)
1.50 (38)	2.50 (64)	-8 (-0.020)	-7 (-0.018)	5 (0.013)	5 (0.013)	-50 (-0.127)	12 (0.030)	22 (0.056)	+8 (+0.020)	+7 (+0.018)	-8 (-0.020)	-16 (-0.041)	-7 (-0.018)	-14 (-0.036)
2.50 (64)	3.50 (89)	-8 (-0.020)	-8 (-0.020)	6 (0.015)	6 (0.015)	-50 (-0.127)	12 (0.030)	22 (0.056)	+8 (+0.020)	+8 (+0.020)	-8 (-0.020)	-16 (-0.041)	-7 (-0.018)	-16 (-0.041)
3.50 (89)	4.00 (102)	-10 (-0.025)	-8 (-0.020)	6 (0.015)	6 (0.015)	-50 (-0.127)	16 (0.041)	26 (0.066)	+10 (+0.025)	+8 (+0.020)	-10 (-0.025)	-20 (-0.051)	-8 (-0.020)	-16 (-0.041)
4.00 (102)	4.25 (108)	-9 (-0.023)	-7 (-0.018)	6 (0.015)	6 (0.015)	-50 (-0.127)	16 (0.041)	26 (0.066)	+9 (+0.023)	+7 (+0.018)	-9 (-0.023)	-18 (-0.046)	-7 (-0.018)	-14 (-0.036)
4.25 (108)	4.50 (114)	-9 (-0.023)	-9 (-0.023)	8 (0.020)	8 (0.020)	-50 (-0.127)	16 (0.041)	26 (0.066)	+9 (+0.023)	+9 (+0.023)	-9 (-0.023)	-18 (-0.046)	-9 (-0.023)	-18 (-0.046)
4.50 (114)	5.00 (127)	-11 (-0.028)	-9 (-0.023)	8 (0.020)	8 (0.020)	-50 (-0.127)	20 (0.051)	30 (0.076)	+11 (+0.028)	+9 (+0.023)	-11 (-0.028)	-22 (-0.056)	-9 (-0.023)	-18 (-0.046)
5.00 (127)	6.50 (165)	-11 (-0.028)	-11 (-0.028)	10 (0.025)	10 (0.025)	-50 (-0.127)	20 (0.051)	30 (0.076)	+11 (+0.028)	+11 (+0.028)	-11 (-0.028)	-22 (-0.056)	-11 (-0.028)	-22 (-0.056)
6.50 (165)	7.00 (178)	-11 (-0.028)	-13 (-0.028)	10 (0.025)	10 (0.025)	-50 (-0.127)	24 (0.061)	34 (0.086)	+11 (+0.028)	+13 (+0.033)	-11 (-0.028)	-22 (-0.056)	-13 (-0.033)	-26 (-0.066)
7.00 (178)	9.00 (229)	-13 (-0.028)	-13 (-0.028)	12 (0.030)	12 (0.030)	-50 (-0.127)	24 (0.061)	34 (0.086)	+13 (+0.033)	+13 (+0.033)	-13 (-0.033)	-26 (-0.056)	-13 (-0.033)	-26 (-0.066)
9.00 (229)	14.00 (356)	-15 (-0.038)	-15 (-0.038)	14 (0.036)	14 (0.036)	-50 (-0.127)	28 (0.071)	38 (0.09)	+15 (+0.038)	+15 (+0.038)	-15 (-0.038)	-30 (-0.076)	-15 (-0.038)	-30 (-0.076)
14.00 (356)	18.00 (457)	-17 (-0.043)	-17 (-0.043)	16 (0.041)	16 (0.041)	-100 (0.254)	32 (0.081)	42 (0.107)	+17 (+0.043)	+17 (+0.043)	-17 (-0.043)	-34 (-0.086)	-17 (-0.043)	-34 (-0.086)
18.00 (457)	30.00 (762)	-19 (-0.048)	-19 (-0.048)	18 (0.046)	18 (0.046)	-100 (0.254)	36 (0.091)	46 (0.117)	+19 (+0.048)	+19 (+0.048)	-19 (-0.048)	-38 (-0.097)	-19 (-0.048)	-38 (-0.097)
30.00 (762)	40.00 (1016)	-21 (-0.053)	-21 (-0.053)	20 (0.051)	20 (0.051)	-100 (0.254)	40 (0.102)	50 (0.127)	+21 (+0.053)	+21 (+0.053)	-21 (-0.053)	-42 (-0.107)	-21 (-0.053)	-42 (-0.107)

Does not apply to bearings with preload.

ROTATING SHAFT

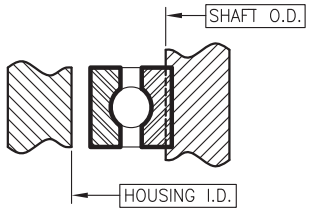

STATIONARY SHAFT

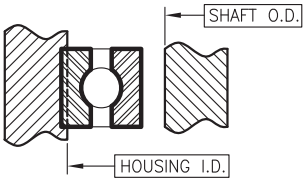

RBC THIN SECTION BALL BEARINGS

TOLERANCE TABLES & RECOMMENDED FITS FOR THIN DENSE CHROME COATED BEARINGS - N-SERIES

RBC PRECISION CLASS 0

Values in 0.0001 inches, ( ):mm

Bearing Bore Size		ABEC 1F C-TYPE												
		Diameters		Race Runout Radial & Axial		Width	Radial Play Before Installation		Rotating Shaft		Stationaly Shaft			
		Bore Nominal	O.D. Nominal						Shaft O.D.	Housing I.D.	Shaft O.D.		Housing I.D.	
Over	Incl.			Inner Max	Outer Max	Nominal	Min	Max	Nominal	Nominal	Max	Min	Max	Min
	1.00 (25)	-6 (-0.015)	-7 (-0.018)	5 (0.013)	8 (0.020)	-50 (-0.127)	10 (0.025)	16 (0.041)	+6 (+0.015)	+7 (+0.018)	-6 (-0.015)	-12 (-0.030)	-7 (-0.018)	-14 (-0.036)
1.00 (25)	1.50 (38)	-7 (-0.018)	-7 (-0.018)	6 (0.015)	8 (0.020)	-50 (-0.127)	12 (0.030)	18 (0.046)	+7 (+0.018)	+7 (+0.018)	-7 (-0.018)	-14 (-0.036)	-7 (-0.018)	-14 (-0.036)
1.50 (38)	2.50 (64)	-8 (-0.020)	-7 (-0.018)	8 (0.020)	10 (0.025)	-50 (-0.127)	12 (0.030)	24 (0.061)	+8 (+0.020)	+7 (+0.018)	-8 (-0.020)	-16 (-0.041)	-7 (-0.018)	-14 (-0.036)
2.50 (64)	3.00 (76)	-8 (-0.020)	-8 (-0.020)	8 (0.020)	10 (0.025)	-50 (-0.127)	12 (0.030)	24 (0.061)	+8 (+0.020)	+8 (+0.020)	-8 (-0.020)	-16 (-0.041)	-8 (-0.020)	-16 (-0.041)
3.00 (76)	3.50 (89)	-10 (-0.025)	-8 (-0.020)	10 (0.025)	12 (0.030)	-50 (-0.127)	16 (0.041)	28 (0.071)	+10 (+0.025)	+8 (+0.020)	-10 (-0.025)	-20 (-0.051)	-8 (-0.020)	-16 (-0.041)
3.50 (89)	4.00 (102)	-9 (-0.023)	-7 (-0.018)	10 (0.025)	12 (0.030)	-50 (-0.127)	16 (0.041)	28 (0.071)	+9 (+0.023)	+7 (+0.018)	-9 (-0.023)	-18 (-0.046)	-7 (-0.018)	-14 (-0.036)
4.00 (102)	4.50 (114)	-9 (-0.023)	-9 (-0.023)	10 (0.025)	14 (0.036)	-50 (-0.127)	16 (0.041)	28 (0.071)	+9 (+0.023)	+9 (+0.023)	-9 (-0.023)	-18 (-0.046)	-9 (-0.023)	-18 (-0.046)
4.50 (114)	5.00 (127)	-11 (-0.028)	-9 (-0.023)	12 (0.030)	14 (0.036)	-50 (-0.127)	16 (0.041)	34 (0.086)	+11 (+0.028)	+9 (+0.023)	-11 (-0.028)	-22 (-0.056)	-9 (-0.023)	-18 (-0.046)
5.00 (127)	6.50 (165)	-11 (-0.028)	-11 (-0.028)	12 (0.030)	16 (0.041)	-50 (-0.127)	20 (0.051)	34 (0.086)	+11 (+0.028)	+11 (+0.028)	-11 (-0.028)	-22 (-0.056)	-11 (-0.028)	-22 (-0.056)
6.00 (165)	7.00 (178)	-11 (-0.028)	-13 (-0.028)	12 (0.030)	16 (0.041)	-50 (-0.127)	24 (0.061)	42 (0.107)	+11 (+0.028)	+13 (+0.033)	-11 (-0.028)	-22 (-0.056)	-13 (-0.033)	-26 (-0.066)
7.00 (178)	9.00 (229)	-13 (-0.028)	-13 (-0.028)	16 (0.041)	18 (0.046)	-50 (-0.127)	24 (0.061)	42 (0.107)	+13 (+0.033)	+13 (+0.033)	-13 (-0.033)	-26 (-0.056)	-13 (-0.033)	-26 (-0.066)
9.00 (229)	12.00 (305)	-15 (-0.038)	-15 (-0.038)	18 (0.046)	20 (0.051)	-50 (-0.127)	28 (0.071)	48 (0.122)	+15 (+0.038)	+15 (+0.038)	-15 (-0.038)	-30 (-0.076)	-15 (-0.038)	-30 (-0.076)
12.00 (305)	14.00 (356)	-17 (-0.043)	-17 (-0.043)	18 (0.046)	20 (0.051)	-100 (0.254)	32 (0.081)	52 (0.132)	+17 (+0.043)	+17 (+0.043)	-17 (-0.043)	-34 (-0.086)	-17 (-0.043)	-34 (-0.086)
14.00 (356)	16.00 (356)	-19 (-0.048)	-19 (-0.048)	18 (0.046)	20 (0.051)	-100 (0.254)	36 (0.091)	56 (0.142)	+19 (+0.048)	+19 (+0.048)	-19 (-0.048)	-38 (-0.097)	-19 (-0.048)	-38 (-0.097)
16.00 (406)	18.00 (457)	-19 (-0.048)	-19 (-0.048)	20 (0.051)	20 (0.051)	-100 (0.254)	36 (0.091)	56 (0.142)	+19 (+0.048)	+19 (+0.048)	-19 (-0.048)	-38 (-0.097)	-19 (-0.048)	-38 (-0.097)
18.00 (457)	20.00 (508)	-21 (-0.053)	-21 (-0.053)	20 (0.051)	20 (0.051)	-100 (0.254)	40 (0.102)	60 (0.152)	+21 (+0.053)	+21 (+0.053)	-21 (-0.053)	-42 (-0.107)	-21 (-0.053)	-42 (-0.107)
20.00 (508)	30.00 (762)	-31 (-0.079)	-31 (-0.079)	20 (0.051)	20 (0.051)	-100 (0.254)	60 (0.152)	80 (0.203)	+31 (+0.079)	+31 (+0.079)	-31 (-0.079)	-62 (-0.157)	-31 (-0.079)	-62 (-0.157)
30.00 (762)	40.00 (1016)	-41 (-0.104)	-41 (-0.104)	20 (0.051)	20 (0.051)	-100 (0.254)	80 (0.203)	100 (0.254)	+41 (+0.104)	+41 (+0.104)	-41 (-0.104)	-82 (-0.208)	-41 (-0.104)	-82 (-0.208)

Does not apply to bearings with preload.

RBC PRECISION CLASS 3

Values in 0.0001 inches, ( ):mm

Bearing Bore Size		ABEC 3F ALL TYPES												
		Diameters		Race Runout Radial & Axial		Width	Radial Play Before Installation (C & X-Type Only)		Rotating Shaft		Stationaly Shaft			
		Bore Nominal	O.D. Nominal						Shaft O.D.	Housing I.D.	Shaft O.D.		Housing I.D.	
Over	Incl.			Inner Max	Outer Max	Nominal	Min	Max	Nominal	Nominal	Max	Min	Max	Min
	1.00 (25)	-4 (-0.010)	-5 (-0.013)	3 (0.008)	4 (0.010)	-50 (-0.127)	7 (0.018)	11 (0.028)	+4 (+0.010)	+5 (+0.013)	-4 (-0.010)	-8 (-0.020)	-5 (-0.013)	-10 (-0.025)
1.00 (25)	1.50 (38)	-5 (-0.013)	-5 (-0.013)	4 (0.010)	4 (0.010)	-50 (-0.127)	8 (0.020)	12 (0.030)	+5 (+0.013)	+5 (+0.013)	-5 (-0.013)	-10 (-0.025)	-5 (-0.013)	-10 (-0.025)
1.50 (38)	3.00 (76)	-6 (-0.015)	-6 (-0.015)	4 (0.010)	5 (0.013)	-50 (-0.127)	8 (0.020)	18 (0.046)	+6 (+0.015)	+6 (+0.015)	-6 (-0.015)	-12 (-0.030)	-6 (-0.015)	-12 (-0.030)
3.00 (76)	4.00 (102)	-7 (-0.018)	-6 (-0.015)	5 (0.013)	6 (0.015)	-50 (-0.127)	10 (0.025)	20 (0.051)	+7 (+0.018)	+6 (+0.015)	-7 (-0.018)	-14 (-0.036)	-6 (-0.015)	-12 (-0.030)
4.00 (102)	4.50 (114)	-7 (-0.018)	-7 (-0.018)	5 (0.013)	8 (0.020)	-50 (-0.127)	10 (0.025)	20 (0.051)	+7 (+0.018)	+7 (+0.018)	-7 (-0.018)	-14 (-0.036)	-7 (-0.018)	-14 (-0.036)
4.50 (114)	5.00 (127)	-8 (-0.020)	-7 (-0.018)	6 (0.015)	8 (0.020)	-50 (-0.127)	12 (0.030)	22 (0.056)	+8 (+0.020)	+7 (+0.018)	-8 (-0.020)	-16 (-0.041)	-7 (-0.018)	-14 (-0.036)
5.00 (127)	6.50 (165)	-8 (-0.020)	-8 (-0.020)	6 (0.015)	9 (0.023)	-50 (-0.127)	12 (0.030)	22 (0.056)	+8 (+0.020)	+8 (+0.020)	-8 (-0.020)	-16 (-0.041)	-8 (-0.020)	-16 (-0.041)
6.50 (165)	7.00 (178)	-8 (-0.020)	-9 (0.023)	6 (0.015)	10 (0.025)	-50 (-0.127)	14 (0.036)	24 (0.061)	+8 (+0.020)	+9 (+0.023)	-8 (-0.020)	-16 (-0.041)	-9 (-0.023)	-18 (-0.046)
7.00 (178)	9.00 (229)	-9 (0.023)	-9 (0.023)	8 (0.020)	10 (0.025)	-50 (-0.127)	14 (0.036)	24 (0.061)	+9 (+0.023)	+9 (+0.023)	-9 (-0.023)	-18 (-0.046)	-9 (-0.023)	-18 (-0.046)
9.00 (229)	11.00 (279)	-10 (-0.025)	-10 (-0.025)	10 (0.025)	12 (0.030)	-50 (-0.127)	16 (0.041)	26 (0.066)	+10 (+0.025)	+10 (+0.025)	-10 (-0.025)	-20 (-0.051)	-10 (-0.025)	-20 (-0.051)
11.00 (279)	14.00 (356)	-10 (-0.025)	-11 (-0.028)	10 (0.025)	14 (0.036)	-50 (-0.127)	18 (0.046)	28 (0.071)	+10 (+0.025)	+11 (+0.028)	-10 (-0.025)	-20 (-0.051)	-11 (-0.28)	-22 (-0.056)
14.00 (356)	18.00 (457)	-11 (-0.028)	-12 (-0.030)	14 (0.036)	16 (0.041)	-100 (0.254)	20 (0.051)	30 (0.034)	+11 (+0.028)	+12 (+0.030)	-11 (-0.28)	-22 (-0.056)	-12 (-0.030)	-24 (-0.061)
18.00 (457)	20.00 (508)	-12 (-0.030)	-14 (-0.036)	16 (0.041)	18 (0.046)	-100 (0.254)	24 (0.061)	34 (0.086)	+12 (+0.030)	+14 (+0.036)	-12 (-0.030)	-24 (-0.061)	-14 (-0.036)	-26 (-0.071)

Does not apply to bearings with preload.

RBC THIN SECTION BALL BEARINGS

TOLERANCE TABLES & RECOMMENDED FITS FOR THIN DENSE CHROME COATED BEARINGS - N-SERIES

RBC PRECISION CLASS 4

Values in 0.0001 inches, ( ):mm

Bearing Bore Size		ABEC 5F ALL TYPES														
		Diameters		Race Runout				Width	Radial Play Before Installation		Rotating Shaft		Stationaly Shaft			
		Bore Nominal	O.D. Nominal	Radial		Axial					Shaft O.D.	Housing I.D.	Shaft O.D.		Housing I.D.	
				Inner Max	Outer Max	Inner Max	Outer Max									
Over	Incl.							Nominal	Min	Max	Nominal	Nominal	Max	Min	Max	Min
	1.50 (38)	-4 (-0.010)	-4 (-0.010)	2 (0.005)	2 (0.005)	3 (0.008)	3 (0.008)	-50 (-0.127)	5 (0.013)	9 (0.023)	+4 (+0.010)	+4 (+0.010)	-4 (-0.010)	-8 (-0.020)	-4 (-0.010)	-8 (-0.020)
1.50 (38)	2.50 (64)	-5 (-0.013)	-5 (-0.013)	2 (0.005)	3 (0.008)	3 (0.008)	4 (0.010)	-50 (-0.127)	6 (0.015)	12 (0.030)	+5 (+0.013)	+5 (+0.013)	-5 (-0.013)	-10 (-0.025)	-5 (-0.013)	-10 (-0.025)
2.50 (64)	3.00 (76)	-5 (-0.013)	-5 (-0.013)	2 (0.005)	4 (0.010)	3 (0.008)	5 (0.013)	-50 (-0.127)	6 (0.015)	12 (0.030)	+5 (+0.013)	+5 (+0.013)	-5 (-0.013)	-10 (-0.025)	-5 (-0.013)	-10 (-0.025)
3.00 (76)	4.00 (102)	-5 (-0.013)	-5 (-0.013)	3 (0.008)	4 (0.010)	3 (0.008)	5 (0.013)	-50 (-0.127)	6 (0.015)	12 (0.030)	+5 (+0.013)	+5 (+0.013)	-5 (-0.013)	-10 (-0.025)	-5 (-0.013)	-10 (-0.025)
4.00 (102)	4.50 (114)	-5 (-0.013)	-6 (-0.015)	3 (0.008)	4 (0.010)	4 (0.010)	5 (0.013)	-50 (-0.127)	8 (0.020)	14 (0.036)	+5 (+0.013)	+6 (+0.015)	-5 (-0.013)	-10 (-0.025)	-6 (-0.015)	-12 (-0.030)
4.50 (114)	5.00 (127)	-6 (-0.015)	-6 (-0.015)	3 (0.008)	4 (0.010)	4 (0.010)	5 (0.013)	-500 (-0.127)	8 (0.020)	14 (0.036)	+6 (+0.015)	+6 (+0.015)	-6 (-0.015)	-12 (-0.030)	-6 (-0.015)	-12 (-0.030)
5.00 (127)	7.00 (178)	-6 (-0.015)	-7 (-0.018)	3 (0.008)	5 (0.013)	4 (0.010)	6 (0.013)	-50 (-0.127)	10 (0.020)	16 (0.036)	+6 (+0.015)	+7 (+0.018)	-6 (-0.015)	-12 (-0.030)	-7 (-0.018)	-14 (-0.036)
7.00 (178)	9.00 (229)	-7 (-0.018)	-7 (-0.018)	4 (0.010)	5 (0.013)	5 (0.013)	6 (0.015)	-50 (-0.127)	10 (0.025)	16 (0.041)	+7 (+0.018)	+7 (+0.018)	-7 (-0.018)	-14 (-0.036)	-7 (-0.018)	-14 (-0.036)
9.00 (229)	11.00 (279)	-7 (-0.018)	-7 (-0.018)	5 (0.013)	6 (0.015)	6 (0.015)	7 (0.015)	-50 (-0.127)	10 (0.025)	16 (0.041)	+7 (+0.018)	+7 (+0.018)	-7 (-0.018)	-14 (-0.036)	-7 (-0.018)	-14 (-0.036)
11.00 (279)	12.00 (305)	-7 (-0.018)	-8 (-0.020)	5 (0.013)	7 (0.018)	6 (0.015)	8 (0.018)	-50 (-0.127)	12 (0.025)	18 (0.046)	+7 (+0.018)	+8 (+0.020)	-7 (-0.018)	-14 (-0.036)	-8 (-0.020)	-16 (-0.041)
12.00 (305)	14.00 (356)	-8 (-0.020)	-8 (-0.020)	5 (0.013)	7 (0.018)	7 (0.018)	8 (0.020)	-100 (-0.127)	12 (0.030)	18 (0.046)	+8 (+0.020)	+8 (+0.020)	-8 (-0.020)	-16 (-0.041)	-8 (-0.020)	-16 (-0.041)
14.00 (356)	18.00 (457)	-8 (-0.020)	-9 (-0.023)	7 (0.018)	8 (0.020)	8 (0.020)	9 (0.020)	-100 (-0.254)	14 (0.030)	20 (0.046)	+8 (+0.020)	+9 (+0.023)	-8 (-0.020)	-16 (-0.041)	-9 (-0.023)	-18 (-0.046)
18.00 (457)	20.00 (508)	-9 (-0.023)	-10 (-0.020)	8 (0.020)	9 (0.023)	9 (0.023)	10 (0.025)	-100 (-0.254)	14 (0.036)	22 (0.056)	+9 (+0.023)	+10 (+0.025)	-9 (-0.023)	-18 (-0.046)	-10 (-0.025)	-20 (-0.051)

Does not apply to bearings with preload.

RBC PRECISION CLASS 6

Values in 0.0001 inches, ( ):mm

Bearing Bore Size		ABEC 7F ALL TYPES													
		Diameters		Race Runout Radial & Axial		Width	Radial Play Before Installation (C & X-Type Only)		Rotating Shaft		Stationaly Shaft			
		Bore Nominal	O.D. Nominal						Shaft O.D.	Housing I.D.	Shaft O.D.		Housing I.D.	
Over	Incl.			Inner Max	Outer Max	Nominal	Min	Max	Nominal	Nominal	Max	Min	Max	Min
	1.00 (25)	-3.5 (-0.009)	-4 (-0.010)	1.5 (0.004)	2 (0.005)	-50 (-0.127)	4 (0.010)	8 (0.020)	+3.5 (+0.009)	+4 (+0.010)	-3.5 (-0.009)	-7 (-0.018)	-4 (-0.010)	-8 (-0.020)
1.00 (25)	2.50 (64)	-4 (-0.010)	-4 (-0.010)	1.5 (0.004)	2 (0.005)	-50 (-0.127)	4 (0.010)	9 (0.023)	+4 (+0.010)	+4 (+0.010)	-4 (-0.010)	-8 (-0.020)	-4 (-0.010)	-8 (-0.020)
2.50 (64)	3.00 (76)	-4.5 (-0.011)	-5 (-0.013)	1.5 (0.004)	2 (0.005)	-50 (-0.127)	6 (0.013)	12 (0.030)	+4 (+0.010)	+5 (+0.013)	-4 (-0.010)	-8 (-0.020)	-5 (-0.013)	-10 (-0.025)
3.00 (76)	4.00 (102)	-4.5 (-0.011)	-5 (-0.013)	2 (0.005)	2 (0.005)	-50 (-0.127)	6 (0.013)	12 (0.030)	+4.5 (+0.011)	+5 (+0.013)	-4.5 (-0.011)	-9 (-0.023)	-5 (-0.013)	-10 (-0.025)
4.00 (102)	4.50 (114)	-4.5 (-0.011)	-6 (-0.015)	2 (0.005)	3 (0.008)	-50 (-0.127)	8 (0.020)	14 (0.036)	+4.5 (+0.011)	+6 (+0.015)	-4.5 (-0.011)	-9 (-0.023)	-6 (-0.015)	-12 (-0.030)
4.50 (114)	7.00 (178)	-5 (-0.013)	-6 (-0.015)	3 (0.008)	4 (0.010)	-500 (-0.127)	8 (0.020)	14 (0.036)	+5 (+0.013)	+6 (+0.015)	-5 (-0.013)	-10 (-0.025)	-6 (-0.015)	-12 (-0.030)
7.00 (178)	9.00 (229)	-6 (-0.015)	-6 (-0.015)	3 (0.008)	4 (0.010)	-50 (-0.127)	8 (0.020)	14 (0.036)	+6 (+0.015)	+6 (+0.015)	-6 (-0.015)	-12 (-0.030)	-6 (-0.015)	-12 (-0.030)
9.00 (229)	12.00 (305)	-7 (-0.018)	-7 (-0.018)	4 (0.010)	5 (0.013)	-50 (-0.127)	10 (0.025)	16 (0.036)	+7 (+0.018)	+7 (+0.018)	-7 (-0.018)	-14 (-0.036)	-7 (-0.018)	-14 (-0.036)
12.00 (305)	14.00 (508)	-7 (-0.018)	-8 (-0.020)	4 (0.010)	5 (0.013)	-100 (-0.254)	12 (0.030)	18 (0.046)	+7 (+0.018)	+8 (+0.020)	-7 (-0.018)	-14 (-0.036)	-8 (-0.020)	-14 (-0.036)

Does not apply to bearings with preload.

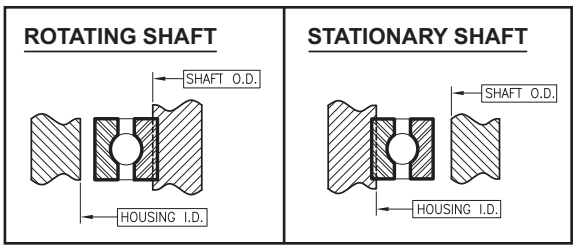

THIN SECTION BALL BEARING ENGINEERING DATA

The methods, equations, and technical data presented in this section allow the user to select the correct bearings and estimate their performance for a wide range of applications. For applications with severe or unusual operating conditions, RBC is prepared to provide an in-depth analysis and recommend the most suitable bearing arrangement.

Where standard bearings cannot be used, RBC can meet the application requirements with a special bearing design specifically tailored for optimum performance. Contact your RBC Sales Engineer for special sizes, materials, application requirements, dimensions and tolerances.

Capacity and Fatigue Life of Ball Bearings

The BASIC DYNAMIC RADIAL LOAD RATING, C, or "dynamic capacity", for a ball bearing is the calculated, constant radial load at which 90% of a group of apparently identical bearings with stationary outer rings can statistically endure 10^6 revolution of the inner ring. ANSI/ABMA Standard 9 with correction factors for race curvatures was used to calculate the catalog ratings.

The DYNAMIC THRUST and DYNAMIC MOMENT LOAD RATINGS are also shown in the product tables. The ratings shown are a guide for the maximum loads under which these bearings should be operated with either pure thrust or pure moment loading. Thrust ratings are 2.5 to 3.0 times the radial ratings depending on the bearing type and cross section. These load ratings are not additive. For combined radial and thrust loads, an equivalent radial load is to be calculated.

The BASIC STATIC LOAD RATING, C_o, or "static capacity", is that uniformly distributed load, which produces a maximum theoretical contact stress of 609,000 psi. At this contact stress permanent deformation of ball and raceway occurs. This deformation is approximately .0001% of the ball diameter.

The RATING LIFE, L_{10}, is a statistical measure of the life which 90% of a large group of apparently identical ball bearings will achieve or exceed. For a single bearing, L_{10} also refers to the life associated with 90% reliability. Median Life, L_{50}, is the life which 50% of the group of ball bearings will achieve or exceed. Median life is approximately five times the rating life.
The relationship between rating life, load rating, and load is:

$L_{10} = (C/P)^3$ with L_{10} = rating life (10^6 rev)
C = basic dynamic radial load rating (lbf)
P = equivalent radial load (lbf)

To obtain the rating life in hours, use:
$L_{10\ hrs} = 16667/N * (C/P)^3$ with N = speed (rpm)

The Equivalent Radial Load is defined as:
$P = XF_r + YF_a$ with F_r = radial load (lbf)
F_a = axial load (lbf)
X - see below
Y - see below

Radial Contact Bearing Calculations

For radial contact bearings calculate P with X = 1 and Y = 0. Then recalculate P with X = 0.56 and Y = (see chart below). Use the larger value of P to determine L_{10} life.

$\frac{F_a}{nd^2}$	Y
25	2.30
50	1.99
100	1.71
150	1.55
200	1.45
300	1.31
500	1.15
750	1.04
1000	1.00

n = number of balls
d = diameter of balls (in.)

Angular or 4-Point Contact Bearing Calculations

For angular contact and 4-point contact bearings calculate P with X = 1.0 and Y = 0. Then recalculate P with X = 0.39 and Y = 0.76. Use the larger value of P to determine L_{10} life.

The equations are valid in the range of approximately 100 hrs to 100,000 hrs of life. Extreme loads or speeds may result in a shorter life; while in less demanding applications, metal fatigue may never affect bearing service life.

Capacity and fatigue life information is based on ANSI/ABMA Standard 9-1990 published by: The American Bearing Manufacturers Association, Inc., 1200 19th Street, NW, Suite 300, Washington, DC 20036-2401

Adjustment Factors for Rating Life

If a bearing design and operation deviates significantly from normal, it may be necessary to use additional factors to estimate the fatigue life L_n.

$L_n = a_1 * a_2 * a_3 * L_{10\ hrs}$

with a_1 = reliability factor
a_2 = material & processing factor
a_3 = application factor

Reliability Factor a_1

Reliability is the percentage of a group of apparently identical ball bearings that is expected to attain or exceed a specified life. For an individual bearing it is the probability that the bearing will attain or exceed a specified life. Typical bearing fatigue life is calculated for 90% reliability. The life adjustment factors for other reliability numbers are shown below.

Reliability %	L_n	Reliability Factor a_1
90	L_{10}	1.00
95	L_5	.62
96	L_4	.53
97	L_3	.44
98	L_2	.33
99	L_1	.21

Material Factor a_2

For standard bearings the material factor a_2 is equal to 1.00. Factor a_2 is determined by material processing, forming methods, heat treatment, and other manufacturing methods. Some commonly used material factors are listed below:

Material, Condition	a_2 max
52100, Air melt	1.00
52100, Vacuum degassed	1.50
52100, Air melt & TDC Plate	2.00
52100, Vacuum melt, (CEVM)	3.00
440C, Air melt	1.00
440C, Vacuum melt (CEVM)	3.00
M50, Vacuum melt (CEVM)	5.00
M50, Vacuum re-melt (VIM-VAR)	8.00

Application Factor a_3

The application factor a_3 is equal to 1.0 for most applications. Unusual or extreme conditions in certain applications such as low speed, shock loading, vibration, and extreme temperature may lower the application factor to 0.50. Contact your RBC Sales Engineer for help in determining this factor for your special applications.

Load Limitations

The load ratings shown in the product tables are not additive. For combined simultaneous loading, an equivalent radial or thrust load must be considered. In general, C-Type bearings are designed for radial loading applications; moderate thrust and/or moment loading may be applied in combination with radial loading. For thrust loading applications use the A-Type bearing; any radial loading should only be applied in combination with thrust loading. X-Type bearings are primarily for reversing thrust and moment loading, pure radial loading should not be applied.

Speed Limitations

The limiting speeds are based on standard lubrication. The unsealed bearing speeds are calculated assuming the bearings are lubricated with MIL-PRF-6085. Limiting speeds for sealed bearings are calculated assuming the bearings are lubricated with MIL-PRF-23827 grease. If bearings are lubricated with alternate oils or greases, new limiting speeds must be calculated, see page 112.

OPERATING CONDITIONS

Lubrication

Lubricants serve a number of very important purposes in ball bearings, including:

- protecting bearing surfaces from corrosion
- reducing rolling and sliding friction
- preventing metal-to-metal contact between balls and raceway
- providing a barrier against external contaminants (grease)
- removing heat (oil)

Lack of lubrication or inadequate lubrication is the most common cause of bearing failure.

Standard RBC Thin Section Ball Bearings are lubricated with either oil or grease. The unsealed bearings, the K series, are thoroughly coated in MIL-PRF-3150 or MIL-PRF-6085 oil and drained of excess. Sealed bearings are lubricated with MIL-PRF-23827 grease. The external surfaces of sealed bearings are lightly coated with the same grease for corrosion resistance. Additional lubricants are also available. Your RBC Sales Engineer can help select the appropriate lubricant for special applications.

Temperature

Standard RBC Thin Section Ball Bearings can operate at temperatures from -65°F to 250°F. Temperatures up to 350°F can be reached if the bearings are temperature stabilized. By the use of special materials RBC can provide bearings for operation to 900°F. Contact your RBC Sales Engineer for recommendations on bearings operating above 250°F.

Limiting Speed

The limiting speed of a bearing is dependent upon a number of different factors including bearing size, bearing type, ball separator design, lubrication and loading. The limiting speeds for the bearings shown in this catalog are determined using the following:

$$N = \frac{1000 * k}{E} \quad \text{with } N = \text{Speed (RPM)}$$

$$E = \frac{D+B}{2} \quad \text{(Bearing Pitch Diameter)}$$

k = constant, see table below

Bearing Type	Load Condition	k Value	
		Grease	Oil
C or A	Radial or Thrust	16	20
X	Thrust	10	12
X	Radial, Combined Radial & Thrust, or Moment	3	4

The *k* values shown give the maximum speeds at which a typical thin section ball bearing can operate. It is recommended that operating speeds of large diameter bearings in a given series be reduced up to 40% of the calculated rating to avoid high bearing temperatures.

Speed ratings can also be impacted by load conditions, lubrication, alignment and ambient temperature. All of these factors must be considered when designing thin section ball bearings into your application.

DUPLEX PAIRS AND AXIAL PRELOADING

Duplex Pairs

Duplex bearings are a pair of angular contact RBC Thin Section Ball Bearings specially ground for use as a matched set. A duplexed pair can be used to provide accurate shaft location, to increase capacity or to increase stiffness of the bearing assembly. A duplex pair of RBC Thin Section Ball Bearings is ground so that when mounted using recommended fits, there will be no internal clearance in the bearings. There are three basic mounting methods to accommodate different loading requirements:

- Back-to-Back (DB), B-Type
- Face-to-Face (DF), F-Type
- Tandem (DT), T-Type

Back-to-Back, DB
B-Type

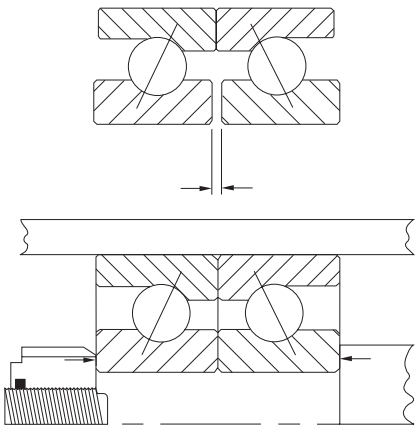

- Heavy radial loads
- Combined thrust & radial loads
- Reversing thrust load
- Excellent rigidity
- Moment loads

Face-to-Face, DF
F-Type

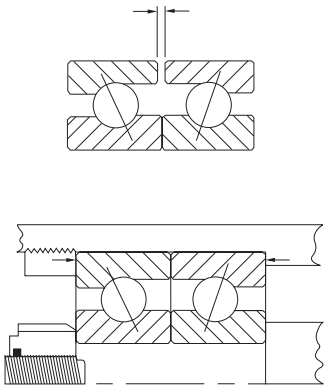

- Heavy radial loads
- Combined thrust & radial loads
- Reversing thrust load
- Moment loads

Tandem, DT
T-Type

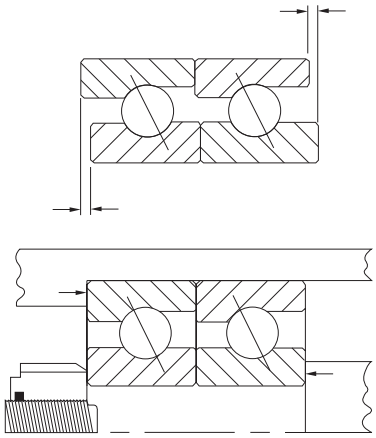

- High one-direction thrust loads
- Minimum axial shaft deflection
- Heavy radial loads

Axial Preloading

Standard duplex bearings are ground so that there will be a light axial preload induced on the bearing at nominal conditions. In some applications increased bearing stiffness may be required. In these cases the duplex grinding can be done such that a heavier axial load is induced in the mounted bearing. This load can be increased or decreased to meet the requirements of a particular application. Consult your RBC Sales Engineer for special requirements.

Radial Play

Radial play (diametral clearance) is the distance the inner ring can be moved radially from one extreme position to the other. Standard RBC Thin Section Ball Bearings are manufactured with enough radial play that some clearance remains after the bearing is properly installed.

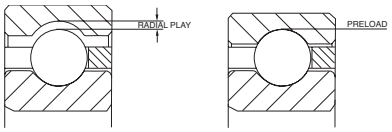

When there is negative radial play (diametral preload) there is interference rather than clearance between the balls and the races. As the interference increases, the friction, stiffness and torque also increase. RBC Thin Section Ball Bearings can be manufactured with customer specified diametral preload or clearance. Consult your RBC Sales Engineer for design assistance.

Radial and Axial Runout

Radial runout of RBC Thin Section Ball Bearings is a measurement of the thickness variation of the bearing rings. The outer ring is measured from the ball path to the outer diameter of the ring, the inner ring is measured from the ball path to the bore. Radial runout is defined as the wall thickness variation of the rotating ring.

Axial runout is measured from the ball path to the face of the bearing rings. The variation in thickness measured is the axial runout.

TOLERANCES

Precision Grades

RBC Thin Section Ball Bearings are available in four precision grades. RBC Precision classes 0, 3, 4 and 6 correspond to ABMA ABEC grades 1F, 3F, 5F and 7F respectively. The tolerances for the bearing bores, outer diameters, radial runouts, axial runouts and radial plays are shown in the Tolerance Tables on pages 104 through 109.

Shaft and Housing Fits

Proper shaft and housing fits are critical to the successful operation of a thin section ball bearing. The internal clearance of the bearing will be reduced proportionally by an interference fit. In addition, the roundness of the shaft and housing will directly affect the roundness of the inner and outer ring raceways. For most applications the inner ring is rotating and the load is stationary with respect to the outer ring. In this circumstance a light press fit onto the shaft is recommended. The recommended shaft and housing fits are shown in the Tolerance Tables on pages 104 through 109.

MOUNTING ARRANGEMENTS

When selecting a mounting arrangement for RBC Thin Section Ball Bearings, you must first consider the loading condition. A duplex pair of angular contact bearings may be used for combined loading, moment loading, or heavy thrust loading. Combination A and C-Type, A and X-Type, or C and X-Type bearings are common mounting arrangements. Two X-Type bearings should never be mounted on the same shaft. There may be many different bearing arrangements for carrying the same load, some typical mounting arrangements are shown below.

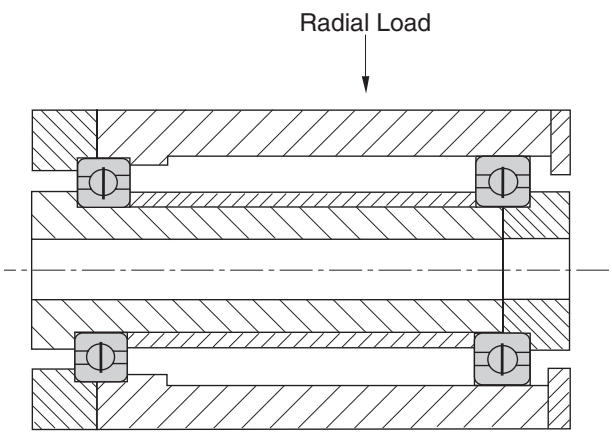

Heavy Radial Loads

The C-Type bearing is designed primarily for heavy radial loads. Two bearings can be installed on the same shaft as shown. By axially fixing one bearing and allowing the other to float, this configuration allows differential expansion between the housing and shaft, such as caused by temperature difference, without adding axial stress to the bearings. Although the C-Type bearing is designed for radial loads, they can withstand moderate thrust, moment and reversing loads.

Reversing Loads

The duplex pair of A-Type bearings offers several configurations. For reversing loads, either Back-to-Back, B-Type, or Face-to-Face, F-Type, should be used. The F-Type mounting method demonstrates reversing thrust load. Combined radial and thrust loads are shown on the B-Type configuration. Both of these methods can be used for heavy radial loads, combined thrust and radial loads, or moment loads.

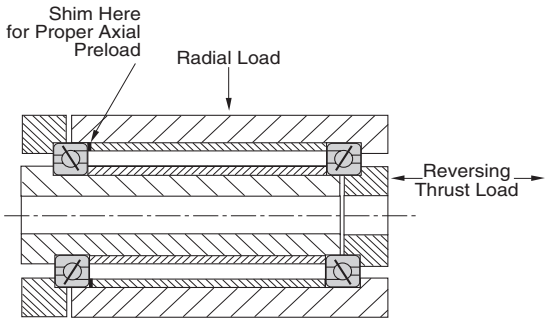

F-Type Configuration

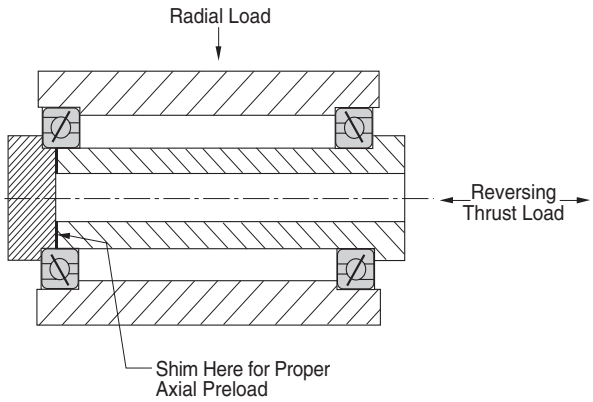

B-Type Configuration

Heavy Combined Loading

For heavy combined loading other special mounting arrangements may be employed. As shown in the top drawing, a duplex pair of A-Type bearings can be used with a floating C-Type bearing. In this configuration the A-Type bearings will carry the thrust load and part of the radial load while the C-Type carries only radial load. An X-Type bearing can replace the duplex pair of A-Type bearings to carry lower thrust loads as shown in the second drawing.

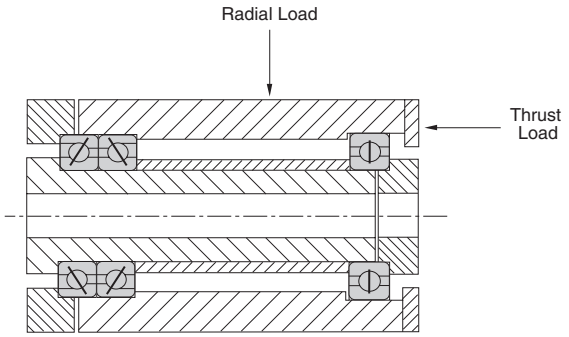

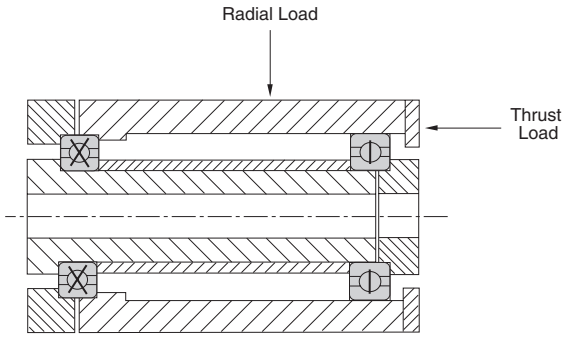

Heavy Combined Loading or Moment Loading

Alternate mountings for heavy combined loading or moment loading are shown below. A duplex pair of B-Type bearings resists high thrust, radial and moment loads. An X-Type bearing may replace the duplex pair in less heavily loaded applications for weight, space and cost savings.

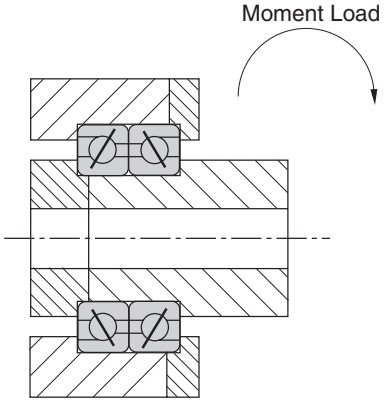

B-Type Configuration

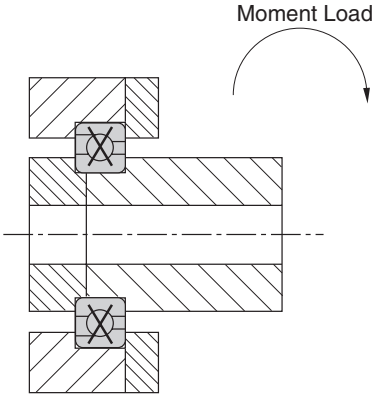

Single Bearing X-Type Configuration

CUSTOM FEATURES

RBC manufactures many custom bearings designed to optimize bearing performance for specific applications. Special features include changes in radial play, lubricants, materials, preloading and design. Contact your RBC Sales Engineer for your custom bearing needs.

Challenge us: There are many design options available to solve difficult application problems.

Materials

The standard bearings shown in the catalog have SAE 52100 steel rings and balls. RBC Thin Section Ball Bearings can be manufactured from other specialty bearing steels to provide corrosion resistance, high temperature capability, alternative load capacity or chemical compatibility.

Rings. RBC has manufactured thin section ball bearings from SAE 440C stainless steel to provide corrosion resistance. As an alternative to stainless steel rings, the entire surface of the rings can be coated with nodular thin dense chrome (TDC). This coating, which meets AMS 2438, achieves a molecular bond that will not flake, peel or separate from the base material. The TDC coat has a hardness of HRC 70 - 78 and can withstand temperatures well beyond the range of the base material.

Special RBC Thin Section Ball Bearings have been manufactured from Aluminum, 300 Series Stainless Steel, 17-4 Stainless Steel, and other metals.

Balls. Some special ball materials available include 440C Stainless Steel, 300 Series Stainless Steel, Silicon Nitride and M-50 Steel.

Lubrication

Many different lubricants are available from RBC for special applications. Greases which are designed specifically for high speed, low torque, water resistance, high temperature, oscillatory motion and food machinery can be provided. Additional lubricants, such as dry film, are suitable for use in vacuums and space applications.

Sealing

Standard seals for thin section ball bearings are molded from elastomers. Polytetraflouroethylene (PTFE) seals, fiber glass reinforced PTFE seals, stainless steel shields and many other options are available for low torque and other special applications.

Radial Play

The radial play (diametral clearance) of a thin section ball bearing will need to be predetermined if mounting fits other than those recommended are used. Special radial play may be required for a temperature differential across the bearing, for housing and shaft materials that have different coefficients of thermal expansion, or to change operating characteristics of the bearing. Radial preloaded bearings are measured to meet bore and O.D. tolerances prior to preload.

Preloading of Duplex Bearings

Standard duplex bearings are ground so that there will be a light axial preload induced on the bearing at nominal conditions. In some applications increased bearing stiffness may be required. In these cases the duplex grinding can be done such that a heavier axial load is induced in the mounted bearing. This load can be increased or decreased to meet the requirements of a particular application. Consult your RBC Sales Engineer for special requirements.

Mounting Features

Mounting features, such as flanges, anti-rotation tabs and mounting holes can be incorporated on the inner and outer rings. Mating parts, such as gears and housings, may be integrated into the bearing rings for improved performance and cost.

Separators

Standard RBC Thin Section Ball Bearings, KA through KG and JU series, are manufactured with brass or nylon separators. The KAA series contains nylon separators. The A-Type bearings contain one piece circular pocket separators, while the C- and X-Types have snap-over separators. The four basic separator materials are brass, nylon, phenolic and stainless steel.

The graph below schematically illustrates the effects of cage design and material on bearing performance. For example, the one piece circular pocket design may reach roughly two times the speed of the snap-over design.

Likewise, a brass separator design will generate more torque and withstand higher temperatures than a phenolic separator. Exact speed limits depend on bearing size, bearing type, lubrication and loading. Specific material advantages and limitations are illustrated below. For assistance in selecting the appropriate separator for special applications, contact your RBC Sales Engineer.

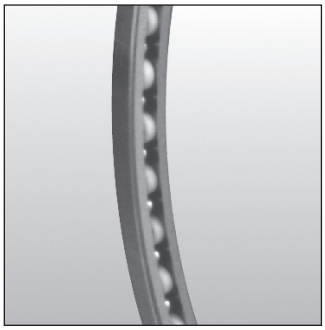

Schematic Illustration of Effects of Cage Design and Material on Bearing Torque, Speed and Temperature.

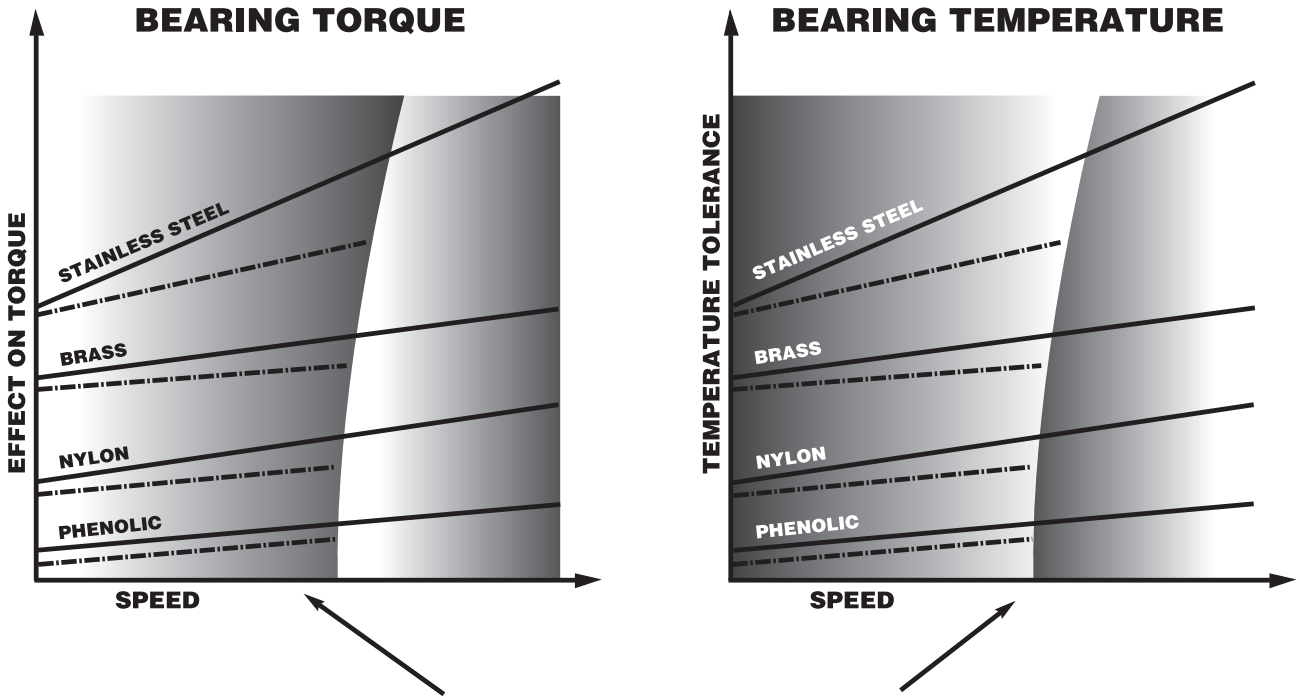

TYPICAL APPLICATIONS

Thin section ball bearings are generally used in applications with space, weight, and load constraints. Some typical applications for standard RBC Thin Section Ball Bearings include:

- **Medical Equipment**
- **Radar Equipment**
- **Material Handling**
- **Antenna Pedestals**
- **Aerospace**
- **Optical Equipment**
- **Rotary Joints**
- **Military Turrets**
- **Robotics**
- **Machine Tools**
- **Textile Machinery**
- **Satellite Systems**
- **Packaging Machinery**
- **Scanning Equipment**
- **Semi-Conductor Manufacturing Equipment**
- **Slip Ring Assemblies**
- **Harmonic Drives**
- **Speed Reducers**

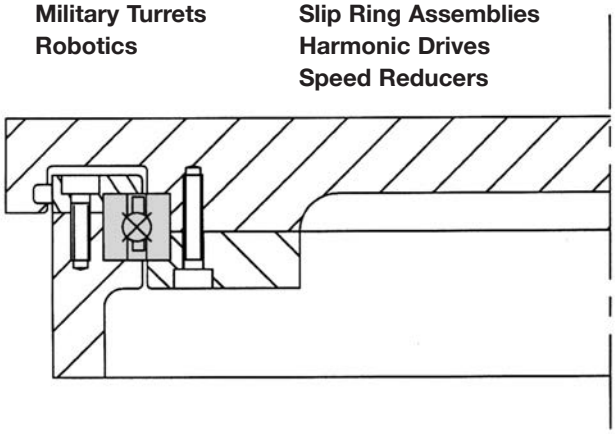

Rotary Table

Using a 4-point contact bearing provides high stiffness with minimum deflection resulting in a streamlined and lightweight design.

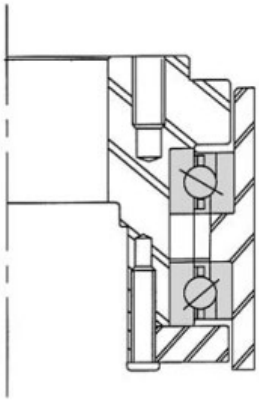

Direct Drive Assembly

A duplex pair of angular contact RBC Thin Section Ball Bearings provide the optimal load carrying capabilities in a compact design.

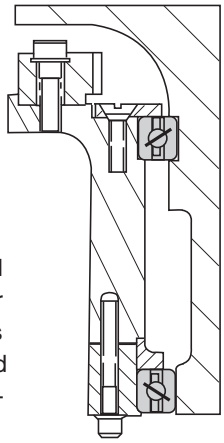

Lightweight Airborne Electro-Optical Imaging Equipment

This application requires bearings with combined load carrying capabilities and minimal added weight. A pair of angular contact RBC Thin Section Ball Bearings provides high stiffness and multiple load carrying capabilities in a compact, lightweight envelope.

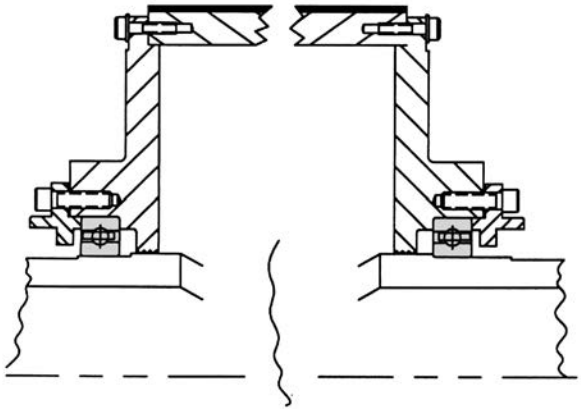

Paper Making Machine

A pair of radial contact RBC Thin Section Ball Bearings is the ideal choice for applications with severe space constraints and significant loads.

Rotating Polishing Table

To provide necessary stiffness with a more compact, lighter weight machine design, use the 4-point contact RBC Thin Section Ball Bearing.

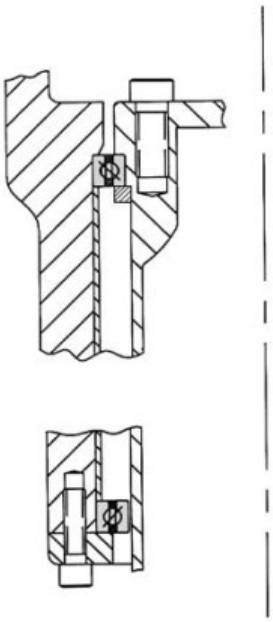

Rotary Joint

By using a pair of angular contact RBC Thin Section Ball Bearings, this design can carry radial, axial and moment loads.

CUSTOM BEARINGS

In addition to the standard RBC Thin Section Ball Bearings, RBC will also manufacture specially designed bearings for specific applications. RBC Sales Engineers and Customer Service Representatives are available for consultation.

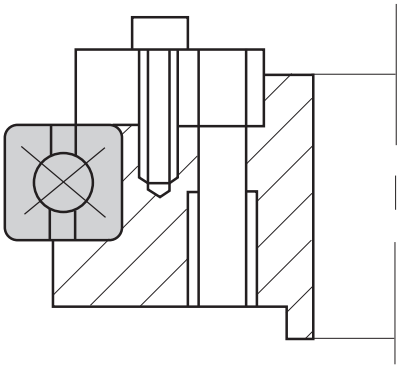

Continuous Rotating Machine Tool Table

Using a 4-point contact RBC Thin Section Ball Bearing provides stiffness for accurate positioning as well as carrying multiple loads. RBC supplied this assembly as shown.

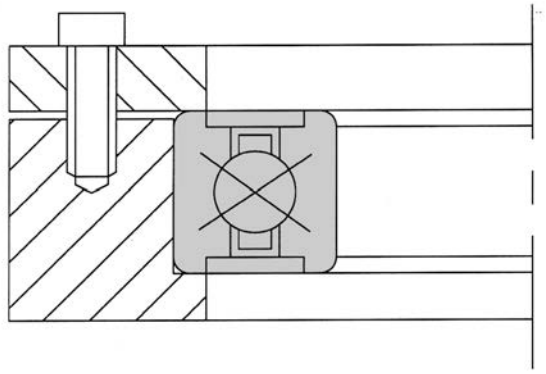

Machine Tool Indexing Table

Running at slow speeds with combined load carrying capabilities and minimal space determined the use of this 4-point RBC Thin Section Ball Bearing. RBC supplied this assembly as shown.

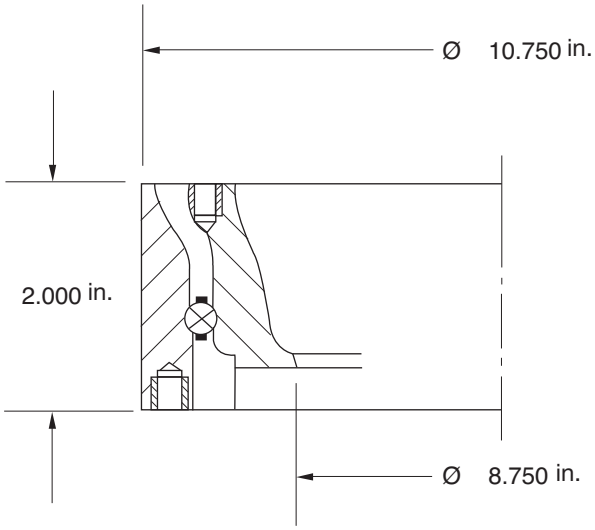

Aerial Camera Assembly

For use in an aerial camera assembly, an extra-light, low torque bearing was required. By redesigning a standard RBC Thin Section Ball Bearing 4-point contact design, the overall assembly weight was lowered from 7 lbs. to 3.8 lbs. In addition to weight reduction, this design, also reduced the running torque below 1 in.-lbs. with the starting torque below 2 in.-lbs.

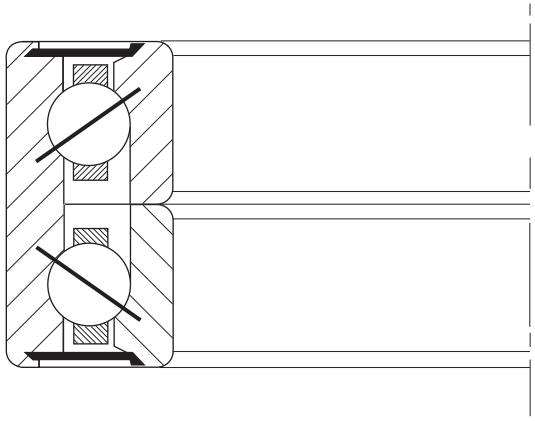

Airborne Radar System

A duplex pair of angular contact RBC Thin Section Ball Bearings was designed for an airborne radar system. This bearing application required combined load carrying capabilities, low temperature compatibility, and relatively low torque. Different from a standard Thin Section, this duplex bearing was designed with one outer ring and two inner rings with a slight preload. This design provided low torque and multiple loading capabilities.

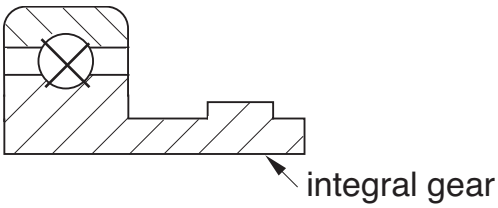

Radar Antenna Drive

An RBC Thin Section Ball Bearing designed with a gear integrated with the inner ring, achieved both a significant weight reduction and improved accuracy as well as simplicity of assembly. This bearing is used in a radar antenna drive which has limited space available for its support bearing. Coil springs were used as spacers between balls to lower bearing torque and further reduce weight.

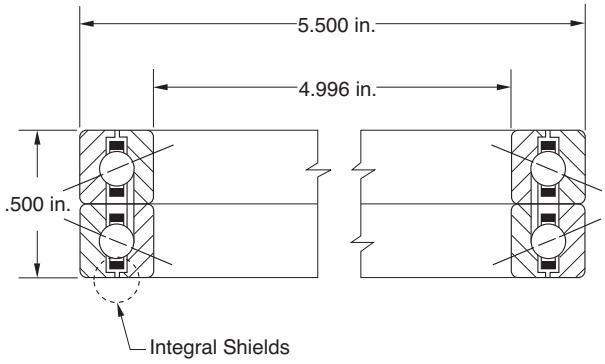

Instrument Gimbal Assembly

A preloaded duplex pair of angular contact RBC Thin Section Ball Bearings were designed to meet the low torque and corrosion resistant requirements in a combined load application. Designed for an instrument gimbal assembly in a missile, the duplex pair of bearings are subjected to combined radial, axial and moment loads. These special RBC Thin Section Ball Bearings have a light preload and were manufactured with integral shields as part of the rings.

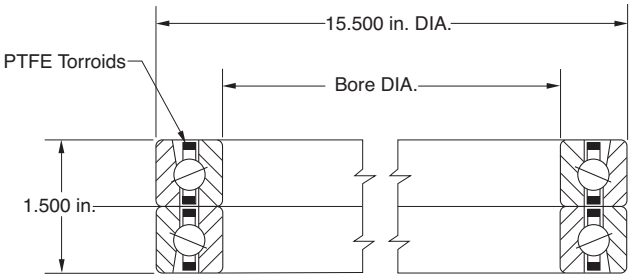

Vacuum Operation

Bearing requirements included minimal radial runout, low torque, corrosion resistance, combined load capabilities and vacuum operation capabilities. Special designed duplex stainless steel angular contact RBC Thin Section Ball Bearings, provided the capabilities required.

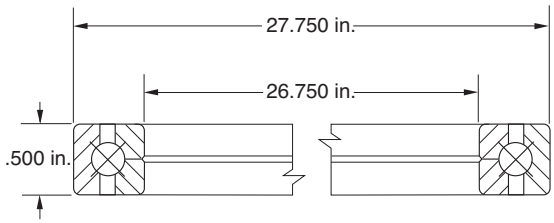

Aircraft Gun Turret

A bearing was required which would take radial, axial, and moment loading, to support an aircraft gun turret. It was desirable to have the bearing match the coefficient of expansion of the aluminum with a split inner ring and special balls to absorb shock and vibration loading.

This bearing performed at 25% of the torque of the steel bearings previously used.

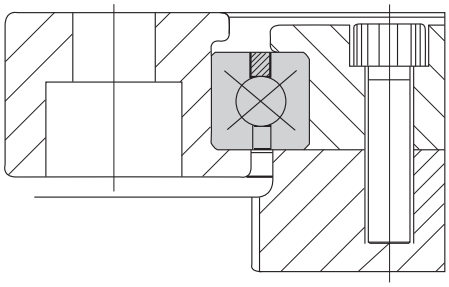

Semiconductor Automated Test Equipment

Semiconductor automated test equipment required an RBC Thin Section Ball Bearing to accurately position a table. In this application the bearing oscillates to ±10°, this bearing was designed as a 4-point contact bearing.

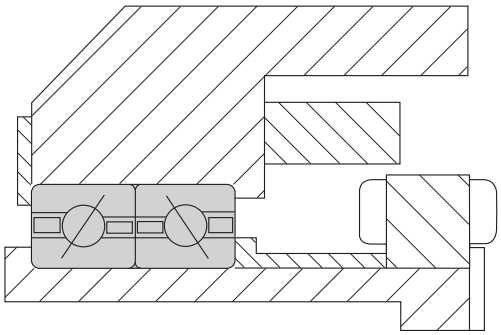

Airborne Turret Azimuth

A low torque, high stiffness, multiple load capacity, corrosion resistant bearing was required for an airborne turret azimuth drive assembly. For this application a duplexed pair of angular contact RBC Thin Section Ball Bearings was designed with toroid separators and stainless steel rings. This design maintained low torque, but still allowed multiple load carrying capabilities.

EXTREME ANGULAR ACCURACY BEARINGS

Client Problem

To provide a set of bearings which maintain an extreme precise angular accuracy of the center line of the shaft to the housing. The angular accuracy requirement was a non-repeatable error (∅a) of one arc second, and a repeatable error (a) of three arc seconds.

RBC Recommendation

Bearings should be made to the most precise geometric tolerances possible. The bearings should be preloaded to overcome the minor surface imperfections of the balls and raceways. They should also be part of a cartridge incorporating the housing and shaft.

RBC Bearing Solution

Bearings were made as part of the cartridge assembly and all angular measurements for accuracy were made relative to the housing and shaft. Bearings were preloaded and spaced axially to help overcome geometric inaccuracies of the bearing. The bearing raceways and balls were made from Consumable Electrode Vacuum Melted AISI 440-C material. As the bearings had to operate in a vacuum, the separator material necessitated a special open weave phenolic material impregnated with a special silicone oil. To prevent migration of the oil from the cartridge assembly, the labyrinth seal was coated with a barrier film.

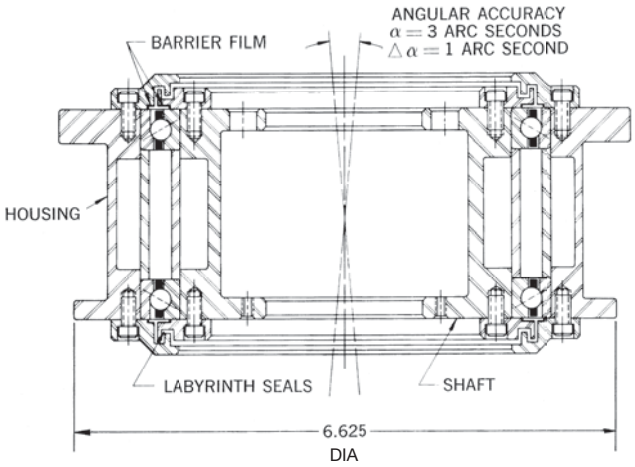

INTEGRAL BEARING ASSEMBLY

Client Problem

Save space and weight in an application involving a power take-off drive from a high speed gearbox.

RBC Recommendation

Make the races of the bearing integral with the housing and possibly with the gear shaft.

RBC Bearing Solution

The bearing housing was designed to incorporate the outer raceway of the roller bearing and the outer raceway of the split inner race ball bearing. In order to increase the reliability of the rolling contact surfaces in the housing, the housing was manufactured from AISI M-50 material Consumable Electrode Vacuum Melted. The gear was made integral with the shaft which also contained the inner raceway of the roller bearing. The gear shaft was manufactured from Consumable Electrode Vacuum Melted AISI-9310 material; case hardened to Rc 61-64 on the gear tooth surface and in the roller bearing raceway. In order to facilitate lubrication of the bearings in the restricted area, lubrication holes were drilled through the housing into the space between the two bearings. The lubrication was fed through these holes from an annular groove in the housing. The two halves of the split inner race were retained to the gear shaft by the use of a lock nut, clamping the races axially. The combined integral assembly of bearings, gear shaft and housing provided the desired space and weight reduction and gained improved operational accuracy. In addition, it afforded easier installation into the gearbox.

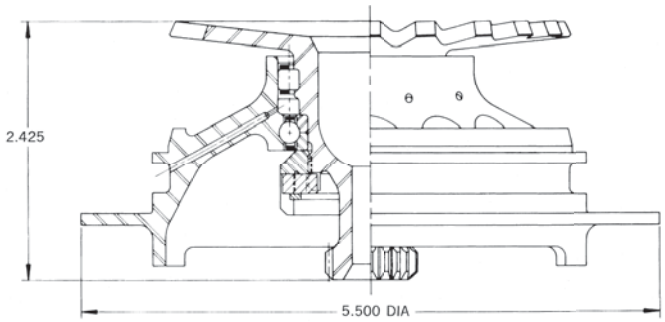

THIN SECTION GEARED BEARING

Client Problem

A radar antenna drive had only limited space available for its support bearings.

RBC Recommendation

Use a thin section rather than a standard section radial ball bearing, thus achieving a significant weight reduction. Incorporate a gear as part of the inner ring to obtain improved accuracy and simplify the assembly.

RBC Bearing Solution

The thin section bearing utilizes coil springs as spacers between the balls instead of a conventional separator to further reduce weight and lower bearing torque. The inner race of the bearing was extended and the gear was cut on this extended portion of the inner race. The incorporation of the gear into the inner race eliminated the necessity of a shaft clamping mechanism, etc., which would be required if the gear were separate from the bearing. Integrating the gear profile into the inner race increased the accuracy of the gear to bearing concentricity. The bearing was manufactured of the following materials: the balls and outer race are from AISI-440-material; the inner race manufactured from AIS1-8620 material, carburized and hardened in the raceway area to Rc 58-60.

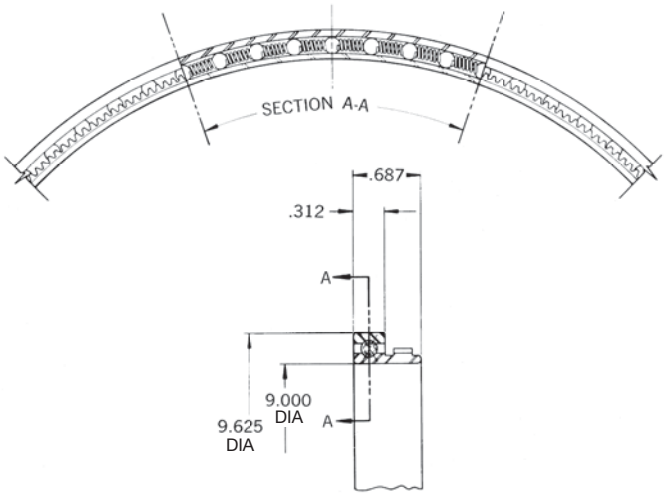

ROLLER, THRUST AND ANGULAR CONTACT BALL BEARING

Client Problem

Cost reduction of an existing hydraulic pump swash plate assembly.

RBC Recommendation

Utilize an integral bearing assembly which combines a roller thrust bearing and an angular contact ball bearing.

RBC Bearing Solution

The original swash plate design in the hydraulic pump utilized a roller thrust bearing to handle the thrust load and a separate angular contact radial ball bearing to handle radial loads; and radially locate the swash plate assembly. The usage of two separate bearings required complex machining of the housing and swash plate with close control of tolerances, to eliminate excessive radial eccentricity of the swash plate assembly. In the original design, which utilized two separate bearings, it was necessary to mount the bearings axially adjacent to each other. The recommended bearing design decreased the axial space required for bearings, resulting in a size and weight savings. A combined bearing assembly is usually lower in cost than two separate bearings. The technique of integrating two bearings usually simplifies an assembly where two bearings had been utilized, or where problems have arisen relative to running accuracy, overall size or weight.

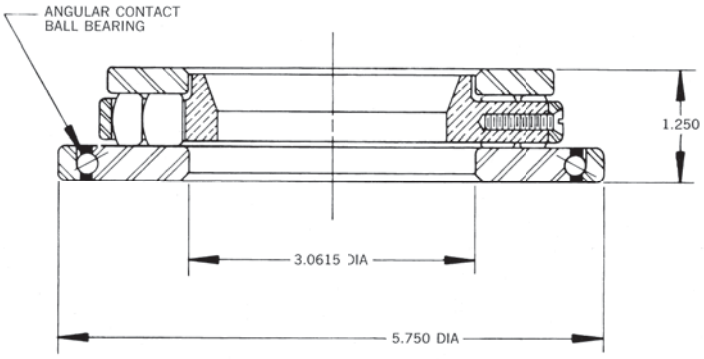

For more information visit our web site at **rbcbearings.com**

SELF-ALIGNING BEARING OPERATING IN LIQUID POLYETHYLENE

Client Problem

A rolling contact bearing was required on a vertical shaft which rotated in a catalytic-polyethylene autoclave. Blind assembly of the bearing and shaft which weighed approximately 10,000 pounds was necessary, due to the autoclave design.

RBC Recommendation

Use radial ball bearing incorporating a self-aligning raceway made from corrosion resistant materials. The bearings should be capable of withstanding operating temperatures as high as 650°F, and capable of operating with liquid polyethylene as the lubricant.

RBC Bearing Solution

The bearing was manufactured from AISI-440-C material, specially heat treated to resist softening at the high operating temperatures. The separator material was L-605 cobalt alloy which offered the necessary wear resistance.

To solve the client's problem of inserting the eighteen foot long assembly into a blind housing, a large lead-in chamfer was formed on the outside of the bearing. This lead-in chamfer provided for easy insertion of the bearing into the housing.

The previous bearing installation did not allow any shaft misalignment, resulting in bent shafts which were then unacceptable for further use. The self-aligning feature of the outer raceway permitted the bearing to misalign while rotating, allowing for shaft distortion as the shaft went through critical speeds.

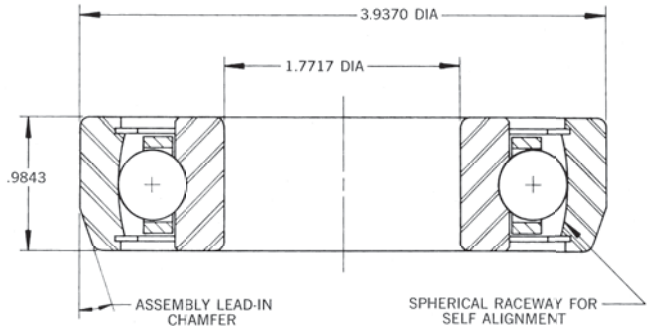

SENBAL BEARING

Client Problem

A fluidic gyroscope required a gimballing, self-aligning bearing which would rotate at high speed. The bore of the bearing was to form part of the fluidic metering and sensing system.

RBC Recommendation

Use a double row, self-aligning spherical ball bearing with spherical outer and inner raceways. The two rows of balls should be preloaded to obtain the running accuracy needed for the fluidic metering system in the bore of the bearing.

RBC Bearing Solution

The double row spherical self-aligning ball bearing was designed with a removable portion of the spherical outer raceway to allow for preloading of the two rows of balls.

With the possibility of different rotational speeds of the two rows of balls, each row of balls had its own separator. To guide the separators, a special configuration was machined on the outside of the separator to allow for each separator to be guided at two points of contact with the spherical outer raceway.

The fluidic metering portion was made as a separate unit, press fitted into the bore of the bearing.

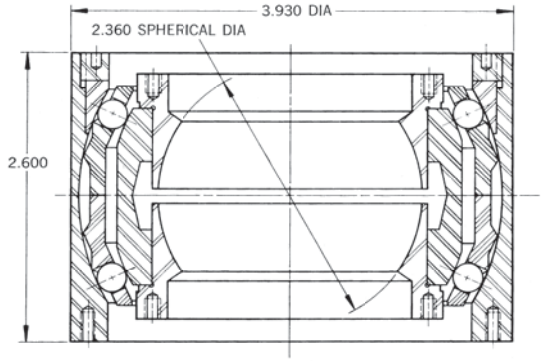

1200°F OSCILLATING BEARING

Client Problem

A high temperature rolling contact, oscillating bearing for operation at 1200°F, subjected to high vibration loads.

RBC Recommendation

Design a rolling contact bearing with radial preload to overcome false brinelling which may occur in the high vibration environment. Bearings should be made from a corrosion resistant, high-temperature alloy.

RBC Bearing Solution

The bearing was manufactured of Stellite® 6B material which was cold worked by an RBC proprietary process to obtain a hardness of Rockwell C-53 minimum in the raceway areas. The balls of this bearing were made from L-605 cobalt alloy. The bearing was of full complement design with a filling slot for insertion of the balls, and negative radial clearance of line to line to .0003" tight.

The lubricating film which is generated by the cobalt alloy races and balls permitted this bearing to operate without any additional lubricant. The increased hardness of the raceways to Rockwell C-53 minimum produced a bearing which was capable of operating up to 1200°F with extreme wear resistance.

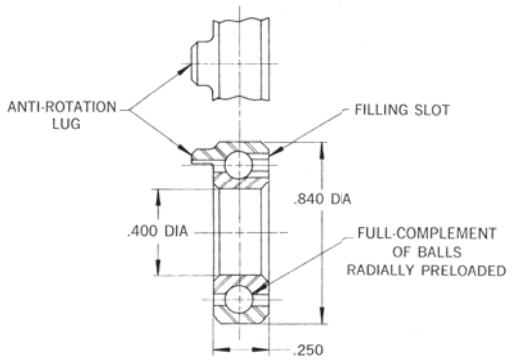

GEARBOX BEARINGS WITH SELF LUBRICATING SEPARATORS

Client Problem

Bearings were needed for operation in high-temperature gearboxes at 600°F to 650°F. Conventional lubrication such as oil was not available, therefore the bearings would have to be self-lubricating.

RBC Recommendation

Use bearings of high-temperature, heat treated AISI-440-C material. Incorporate in these bearings RBC developed proprietary graphitic carbon separators, to act as the bearing lubricant.

RBC Bearing Solution

Angular contact ball bearings were designed, utilizing an inner land guided separator of graphitic carbon material. The separator was reinforced on its outside diameter with a metallic shroud to withstand the centrifugal forces from high operating speeds and resist fracturing, which could result from the tremendous acceleration rate of the bearing rotation.

To facilitate a break-in period required for transfer of the self-lubricating material from the graphitic carbon separator to the rolling contact surfaces, the balls and raceways were coated with an impinged, tungsten-disulfide dry-film lubricant of approximately .000020" in thickness. With the dry film lubricant on the raceways and balls, the bearings were capable of operating at the required speed without any break-in period normally required for bearings incorporating dry, self-lubricating separators.

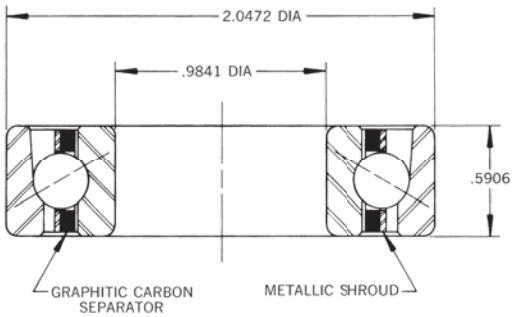

For more information visit our web site at **rbcbearings.com**

Stellite® is a registered trademark of the Deloro Stellite Company, Inc.

HIGH TEMPERATURE, ACTUATOR THRUST BEARINGS

Client Problem

A high temperature thrust bearing was needed to support the reactive thrust of a ball screw actuator. Bearings had to be capable of operating at approximately 850°F.

RBC Recommendation

Use bearings of high temperature tool steel to withstand the applied loads at the high operating temperature.

RBC Bearing Solution

Bearings were manufactured from CEVM M-2 tool steel with a full complement of sixteen .187 diameter tungsten carbide balls. The bearing was designed having a contact angle of 60° to handle the high thrust load and some radial loading.

The races were coated with a proprietary dry-film lubricant applied to the raceways of the bearings prior to installation of the bearing in the application.

The significant design feature which allows the bearings to operate at 850°F and at speeds up to 750 RPM without excessive wear is the combination of the tungsten carbide balls running against the M-2 tool steel raceways. Similar designs using M-2 tool steel balls had worn very rapidly at relatively short periods of application at the operating temperatures.

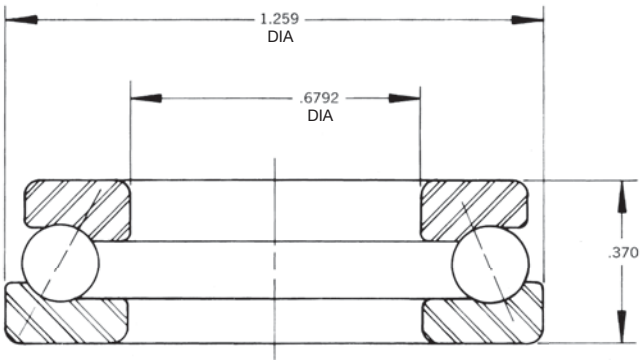

NON-MAGNETIC BEARING

Client Problem

A newly designed rotating magnetometer for ore analysis required a non-magnetic bearing.

RBC Recommendation

Use a bearing with the raceways and balls made of a material which would be capable of operating under the loads and possess the lowest magnetic permeability. The loading combined thrust, radial and moment loads which required a duplex pair of bearings.

RBC Bearing Solution

Manufactured the bearing from Berylco 25 material. This material was used for the inner and outer races, balls and shields. The separator was manufactured of a phenolic material.

The bearing was designed as a common outer duplex DB pair, lightly preloaded. To reduce contamination possibility, shields were incorporated. The bearing was lubricated by grease plating the raceways with MIL-PRF-23827 lubricant.

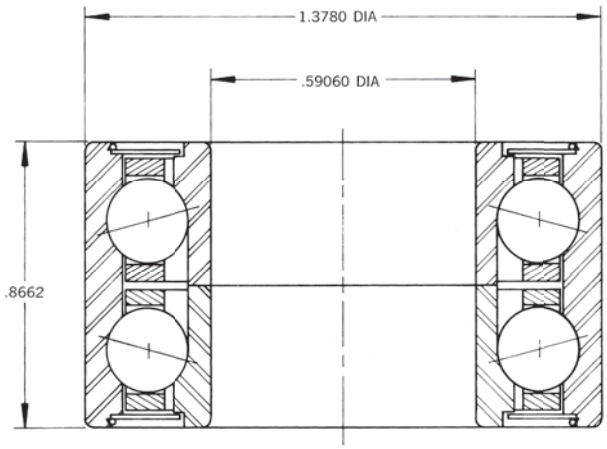

1400°F SELF-ALIGNING BALL BEARING

Client Problem

A hinge bearing on the exhaust ducts of a jet engine used to propel and lift a ground effect vehicle machine.

RBC Recommendation

Use a double row angular contact ball bearing in a self-aligning housing. Bearing materials to be made of corrosion and heat resistant material.

RBC Bearing Solution

The double row ball bearing cartridge unit utilizes L-605 material for the raceway and balls. The bearing was mounted in a self-contained spherical housing to compensate for misalignment of the shaft during operation, which occurs due to temperature differentials between the frame and the exhaust nozzles.

The races were made by a special RBC developed proprietary race hardening technique.

With this technique the L-605 cobalt alloy material is work hardened and then heat treated to a Rockwell C-53 minimum.

The bearing operated for 50 hours with 1400°F exhaust gas passing through the bearing without any significant wear.

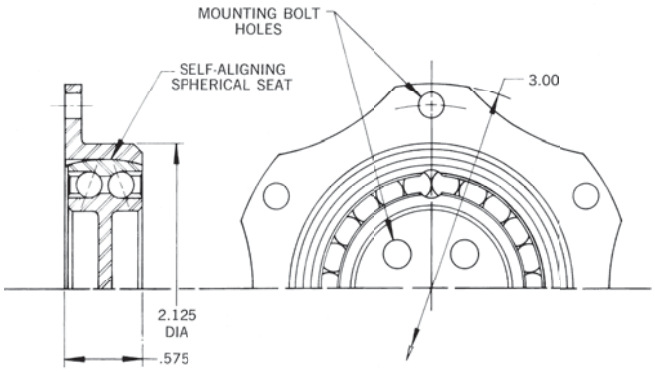

SPHERICAL, METAL-TO-METAL BEARINGS

Client Problem

A manufacturer of commercial aircraft required a landing gear support trunion bearing.

Bearing must have low radial and axial clearances.

RBC Recommendation

Use a metal-to-metal spherical plain bearing. It should have a dry film lubricant on its spherical bearing surfaces. The bearing should be fabricated from corrosion resistant material.

RBC Bearing Solution

With the clearances required, .0010/.0030 radial and .009 max. axial, assembly of match ground components was necessary. Swaging a bearing of this size would not result in reliable clearance control. The outer race was assembled to the ball by deforming it under radial pressure to an elliptical shape to allow the insertion of the ball. Once the ball is inserted, the pressure is removed from the outer race, allowing it to return to its original shape.

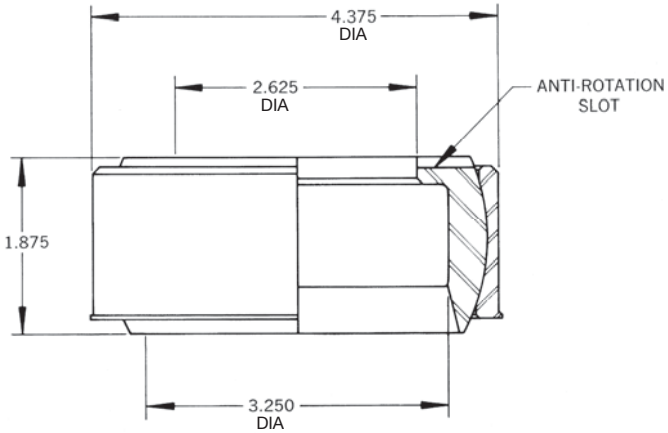

For more information visit our web site at **rbcbearings.com**

FOOD PROCESSING EQUIPMENT BEARINGS

Client Problem

Relatively short life was obtained on bearings made of 316 stainless steel in food processing equipment. 316 stainless steel was required to prevent contamination of the food products.

RBC Recommendation

Use a harder, more wear resistant material which would still be resistant to the corrosive fluids of the processed food and prevent contamination.

RBC Bearing Solution

A search of various materials which were resistant to the food products handled by this particular piece of equipment brought to light that certain cobalt alloys could be used without any fear of contamination or corrosion.

In order to increase the wear resistance of the cobalt alloys, they were cold worked in the raceways to increase the hardness and thereby increase the wear resistance.

The alloy used for the raceways and the balls was L-605. Separator material was 17-4 PH.

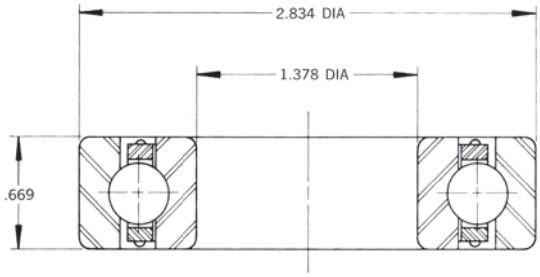

CHEMICAL PROCESSING EQUIPMENT BEARINGS

Client Problem

Bearings exposed to photographic-processing chemical solutions were failing. Bearings being used were made of AISI-440-C material, sealed, and grease lubricated.

RBC Recommendation

Use a bearing of a different alloy; make the separator self-lubricating and run the bearing in the chemical solutions.

RBC Bearing Solution

The bearing used cobalt alloy balls and races and a self-lubricating separator of Fiberglass reinforced TFE. To give additional strength to the riveted separator in this bearing, side plates of 300 series stainless steel were added to the separator.

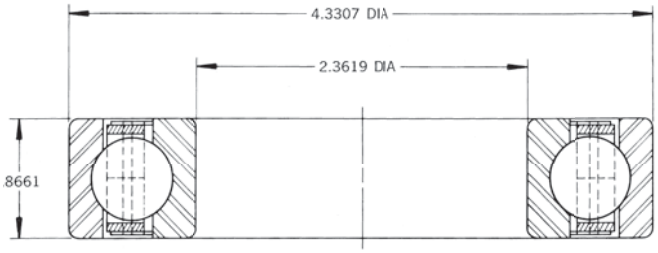

CRYOGENIC BEARINGS

Client Problem

High speed ball and roller bearings for use in cryogenic equipment. Bearings should also operate in cryogenic liquid or gaseous environment.

RBC Recommendation

Use bearings of a corrosion resistant material such as AISI-440-C and incorporate a self-lubricating material for the separators.

RBC Bearing Solution

Ball and roller bearings of ABEC-5 tolerance grade were made of AISI-440-C material, with special sub-zero treatment in liquid nitrogen. This sub-zero treatment gave the bearings the dimensional stability necessary for operating in cryogenic equipment.

The bearing separators were made of Teflon® reinforced Fiberglass.

This basic bearing design criterion has been used in almost all liquid hydrogen and oxygen turbo pumps used in present day rocket engines.

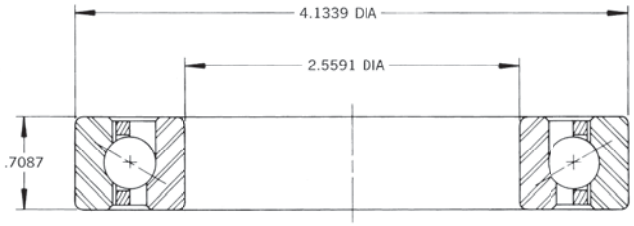

Teflon® is a registered trademark of DuPont.

SELF-LUBRICATING MAIN SHAFT BEARING

Client Problem

Mainshaft bearing for a vertical lift engine. For weight reduction, the bearing should be self-lubricating to eliminate a portion of the engine lubricating system.

Speed of the 85mm bore bearing was 16,000 RPM. The bearing, located in turbine end of the jet engine, accommodates axial shaft expansion.

RBC Recommendation

Use a ball bearing with races and balls made from wear-resistant materials. Lubricate the bearing with a shrouded self-lubricating graphite separator. Make the inner race cylindrical to accommodate the axial shaft expansion.

RBC Bearing Solution

Bearing was manufactured from CEVM AISI-M50 material for the races and balls.

The separator of shrouded graphite was outer land guided on two graphite rings, pressed into the outer race ring.

To prevent damage to the graphite while inserting the shaft into the bearing, a side plate was added which prevented any accidental contact of the shaft with the graphite separator. To allow for the excess graphite to purge from the bearing, holes were put in the protective side plate.

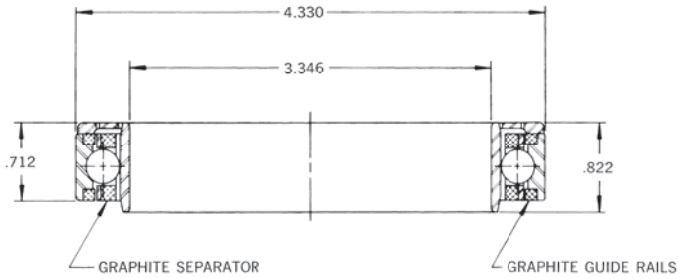

For more information visit our web site at **rbcbearings.com**

NUCLEAR REACTOR BEARING

Client Problem

Bearing to accommodate the thrust load in a control rod drive mechanism. Bearing is lubricated with chemically pure water, de-ionized and de-oxygenated.

RBC Recommendation

Use a double row ball bearing, tandem ground for thrust sharing to obtain the life required. Because radial support of the inner race is marginal, the inner race for both rows should be ground on the same ring.

RBC Bearing Solution

The double row ball bearing was made of cobalt alloy materials, the separator of 17-4 PH.

To obtain the maximum capacity in this double gothic arch thrust bearing, the outer races are split, permitting the maximum quantity of balls in each row. Thrust sharing of two rows is accomplished by accurate match grinding of the spacer ring to fit the gap between the outer races, and by matching the contact angle in both rows equal within two degrees.

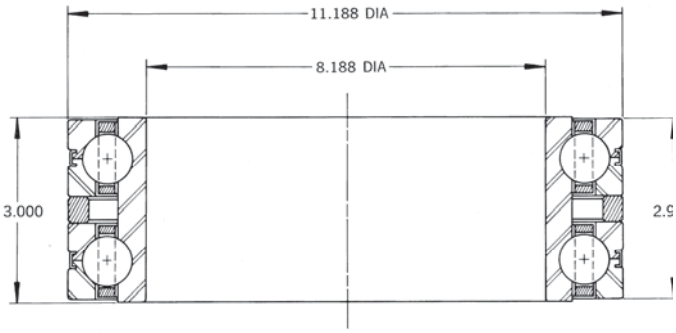

BALL BEARINGS FOR VACUUM OPERATION

Client Problem

A high speed ball bearing, to run at temperatures up to 1000°F

RBC Recommendation

Use bearing of wear resistant, high temperature tool steel. Bearing lubricant should be dry and not sublimate.

RBC Bearing Solution

The bearings were made of T-5 tool steel which has high hardness and wear resistance at 1000°F. The bearings contain a full complement of balls and no separator.

The lubricant was an ultra-thin layer of silver deposited on the balls. The bearings were manufactured without any snap which may abrade the silver on the balls.

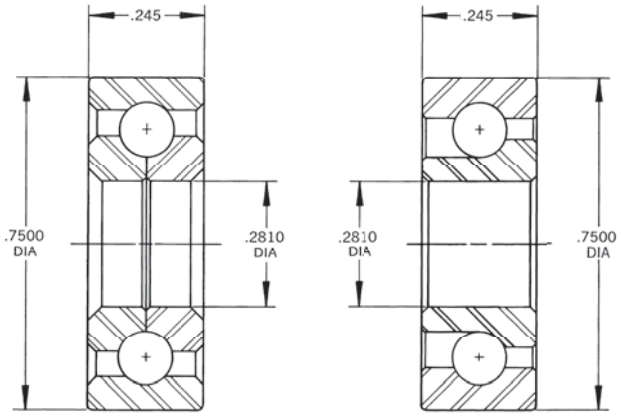

TURBO-MACHINERY ROLLER BEARING

Client Problem

A high speed mainshaft roller bearing was failing due to skidding. Insufficient load on the bearing was the cause of skidding.

RBC Recommendation

Use a pre-loaded roller bearing to overcome the skidding problem.

RBC Bearing Solution

The roller bearing was designed with hollow rollers which provided a radial internal preload between the inner and outer races.

The bearing has an inner land guided separator. The viscous drag between the separator and the inner race land diameter promotes the rotation of the separator.

To provide for cooling the inner race, under race cooling grooves were located in the bore of the inner race.

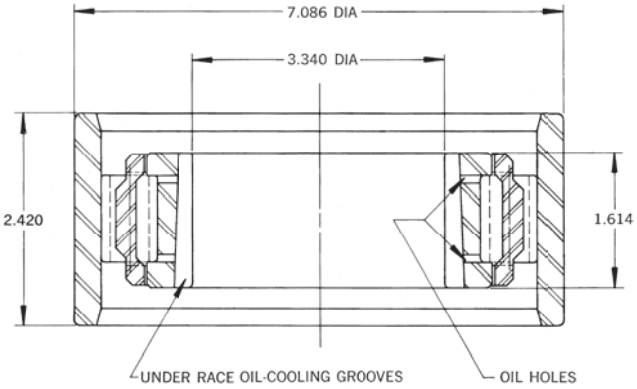

DRUSBA BEARING

Client Problem

A large diameter bearing to support a platform. The platform and portion of the bearing operate in an anisotropic quantum electrodynamic field, while in a vacuum.

RBC Recommendation

A 4-point contact pre-loaded ball bearing. Provide means for heat addition or removal to maintain the desired pre-load. Temperature variations occur due to the field; the outer ring normally has a higher temperature than the inner ring.

RBC Bearing Solution

A split outer race, full-complement ball bearing to be made of Cobenium rings, and sodium filled Cobenium balls. The raceways and balls were gold plated. The gold is the lubricant.

The inner ring of the bearing contains heating or cooling chambers. These are formed by electron beam welding the annular members to the ring. The fluid flowing through the chambers is controlled relative to rate of flow and temperature, depending upon the specific race area temperature serviced by that chamber. This permits control of the geometric configuration of the inner race and preload.

The sodium filled balls are used for heat transfer between the rings.

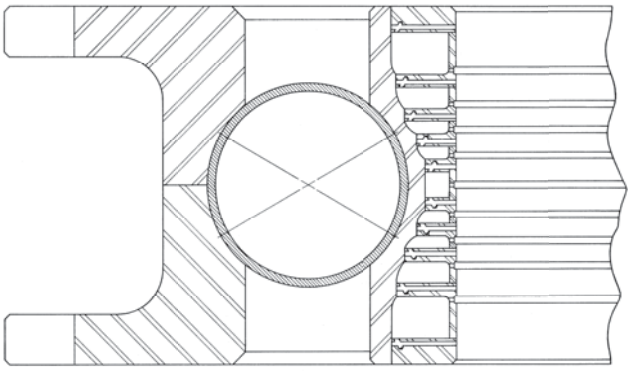

For more information visit our web site at **rbcbearings.com**

WATER-LUBRICATED BEARINGS

Client Problem

Long-life, wear-resistant bearings for running in water.

RBC Recommendation

Use bearings of cobalt alloys for maximum corrosion and wear resistance. Design the bearing with race curvatures and clearances to compensate for the lack of lubricity of the water.

RBC Bearing Solution

Bearing rings were made of L-605 cobalt alloy. An RBC developed cold working technique was used to increase the hardness of the alloy to Rc 53 minimum after heat treatment, for increased wear resistance. Normal cold worked and heat treated hardness of this alloy is Rc 47.

The separators in the bearings were made from 17-4 PH corrosion resistant material, heat treated to increase wear resistance.

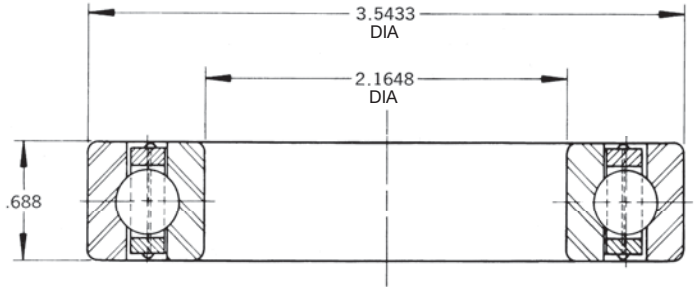

OPTICAL PRECISION BEARINGS

Client Problem

Support a 14" diameter rotating tube which contained lenses. Minimal radial runout was required to prevent distortion of the image by the lenses. Bearings should be low in torque and corrosion resistant, pre-lubricated, suitable for a vacuum operation.

RBC Recommendation

The rotating tube should be supported with duplex pairs of bearings, DB mounted, preloaded, with minimal lubrication of a low vapor pressure lubricant.

RBC Bearing Solution

Duplex DB pair of bearings, pre-loaded, were manufactured of passivated AISI-440-C corrosion resistant steel.

The radial and axial runouts were held to the following: radial runout, inner, .0002 T.I.R.; outer, .0003 T.I.R.; axial runout, inner, .0002 T.I.R.; outer, .0003 T.I.R. The separator consisted of TFE rings around alternate balls for low starting and running torque.

Bearings were lubricated with a special lubricant and then centrifuged at 100 g's for 10 minutes to remove the excess oil.

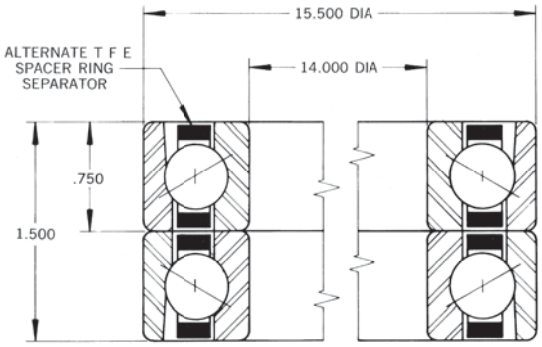

CAMERA MOUNT BEARING

Client Problem

A lightweight, low torque bearing for use in an aerial camera assembly.

RBC Recommendation

Use a bearing with rings made of aluminum, and hard anodize the raceway areas.

RBC Bearing Solution

The original steel bearing design which was a double row angular contact ball bearing in an aluminum housing was replaced with a single row, 4 point contact bearing, with the rings manufactured of 7075-T-651 aluminum. The raceways of both rings were hard anodized and ground after hard anodizing. Balls were of passivated AISI-440-C.

This construction utilizing the aluminum material, reduced the overall weight of the bearing assembly from over 7 lbs. in the original design to 3.8 lbs. in the finished unit.

In order to obtain a low running and starting torque, alternate balls in the raceway were surrounded with TFE separator and the raceways were grease-plated. The bearing running torque was below 1 inch lbs. with the starting torque being below 2 inch lbs.

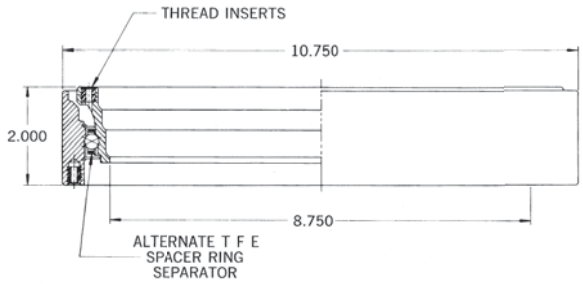

TURBO-MACHINERY BALL BEARING

Client Problem

A ball bearing running at 2.2 million DN*, with no load, was failing due to the fatigue of the outer race, and ball skidding. Fatigue failures had been occurring due to the large number of stress cycles, caused solely by the centrifugal force of the balls.

RBC Recommendation

Reduce the number of balls in the bearing, thereby reducing the number of stress cycles on the outer race.

Make the separator a lightweight steel design. Reduction of the separator and ball mass would reduce the inertial resistance, thereby reducing skidding. Change material from AISI-52100 to a tool steel to increase resistance to skid damage.

RBC Bearing Solution

Bearing races and balls were made from CEVM AISI-M50 tool steel. The separator was manufactured from AISI-4340 material, hardened to Rc 26-32 and silver plated.

The number of balls was reduced from twenty to eight balls, reducing the number of stress cycles by sixty percent.

The separator configuration permitted an increase of lubricant flow through the bearing for cooling and lubrication.

*DN = D, bearing bore in (mm) - N, shaft speed in (RPM).

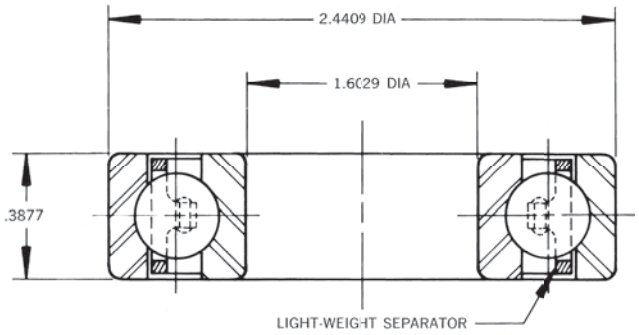

For more information visit our web site at **rbcbearings.com**

Thin Section Availability Chart

		BORE SIZE IN INCHES																																
Cross Section	**Race Type**	**1.00**	**1.50**	**1.75**	**2.00**	**2.50**	**3.00**	**3.50**	**4.00**	**4.25**	**4.50**	**4.75**	**5.00**	**5.50**	**6.00**	**6.50**	**7.00**	**7.50**	**8.00**	**9.00**	**10.00**	**11.00**	**12.00**	**14.00**	**16.00**	**18.00**	**20.00**	**25.00**	**27.50**	**30.00**	**32.50**	**35.00**	**37.50**	**40.00**
KAA Series	**A**	▲	▲	▲																														
3/16" x 3/16"	**C**	▲	▲	✔																														
	X	▲	▲	✔																														
JHA Series**	**A**																																	
3/16" x 1/4"	**C**	▲	▲	▲																														
	X	▲	▲	▲																														
KA Series	**A**				▲	▲	▲	▲	▲		▲		▲					✔																
1/4" x 1/4"	**C**				▲	▲	▲	▲	▲	▲	✔	✔	▲	▲	▲	✔	▲	✔	✔	✔	✔		✔											
	X				▲	▲	▲	▲	▲	▲	▲	✔	▲	▲	▲	✔	✔	▲			✔		▲											
JA Series**	**A**																																	
1/4" x 1/4"	**C**				▲	▲	▲	▲	▲	▲			▲																					
	X				▲	▲	▲	▲	▲		▲		▲		▲																			
KB Series	**A**				▲	✔	▲	▲	✔		✔			✔					▲															
5/16" x 5/16"	**C**				▲	▲	▲	▲	▲	▲	✔		✔							✔														
	X				✔	▲	▲	✔	▲	▲	▲		▲	▲		▲			▲	✔														
JB Series**	**A**																																	
5/16" x 5/16"	**C**				▲	▲	▲	▲	▲	▲																								
	X				▲	▲	▲	▲	▲	▲																								
JU Series**	**A**																																	
3/8" x 1/2"	**C**								▲		▲	▲	▲	▲	▲	▲	▲	▲	▲	▲	▲	▲												
	X								▲		▲		▲	▲	▲	▲		▲	▲	▲	▲	▲	▲											
KC Series	**A**								▲		▲		▲	✔	✔																			
3/8" x 3/8"	**C**								▲		▲		✔	✔	▲	✔	▲	✔			▲		✔											
	X								✔		▲		▲	✔	▲	▲	✔		✔	▲	▲	▲	▲											
KD Series	**A**								▲		✔		▲	▲	✔	▲	✔		✔	▲		✔												
1/2" x 1/2"	**C**								▲	✔			▲	▲	▲	✔	▲	✔	▲	▲	▲	▲	▲											
	X								▲		▲		▲	✔	✔	▲	▲		▲	▲	▲	✔	▲	▲		✔								
KF Series	**A**											✔	✔	▲		▲	✔	✔		▲				✔										
3/4" x 3/4"	**C**								✔			✔	✔	✔	▲	✔	✔	▲	▲	▲	▲	▲	▲	▲										
	X								✔			✔	✔	▲	▲	✔	▲	▲	▲	▲	▲	▲	▲	▲										
	A															▲			▲	✔			▲	▲	▲	✔	▲							
KG Series	**C**												✔			▲		▲	▲	▲	▲	✔	▲	▲	▲	▲	▲	▲		✔				
1" x 1"	**X**												✔		▲	▲	▲	✔	▲	✔	▲	▲	▲	▲	▲	▲	▲	✔		✔				
Cross Section	**Race Type**	**1.00**	**1.50**	**1.75**	**2.00**	**2.50**	**3.00**	**3.50**	**4.00**	**4.25**	**4.50**	**4.75**	**5.00**	**5.50**	**6.00**	**6.50**	**7.00**	**7.50**	**8.00**	**9.00**	**10.00**	**11.00**	**12.00**	**14.00**	**16.00**	**18.00**	**20.00**	**25.00**	**27.50**	**30.00**	**32.50**	**35.00**	**37.50**	**40.00**

** Sealed bearings ▲ Bearings in stock ✔ Bearings with limited availability

All other bearings check availability

NOTES

ENGINEERING APPLICATION DATA FAST FAX

For assistance in selecting the correct bearings for your design, complete this form and fax or mail it to:

RBC Bearings
400 Sullivan Way, P.O. Box 77430 West Trenton, NJ 08628-7430
FAX: 609-882-5533
www.rbcbearings.com

Company Name: _____ Date: _____

Street Address: _____

City: _____ State: _____ Zip: _____

Name: _____ Title: _____

Phone: _____ Fax: _____ e-mail: _____

Description of application: _____

_____

Speed:

Rotational _____ rpm ☐ Inner Ring Rotating

Oscillatory _____ cpm ☐ Outer Ring Rotating

Temperature:

Average running _____ min _____ max _____

Loading:

☐ Shock ☐ Vibration ☐ Safety factor (Please specify) _____

Dynamic radial _____ Lbs./N ☐ Stationary Load ☐ Rotating Load

Dynamic thrust _____ Lbs./N

Dynamic moment _____ Ft. Lbs./N.m ☐ Stationary Load ☐ Rotating Load
(show application of load on sketch)

Static radial _____ Lbs./N

Static thrust _____ Lbs./N

Static moment _____ Ft. Lbs./N.m (show application of load on sketch)

Life: _____

Lubricant:

☐ Grease ☐ Oil ☐ Special (Please specify) _____

Size limitations:

Max. OD _____ inches/mm Min. bore _____ inches/mm Max. Width _____ inches/mm

Other data:

☐ Seals ☐ Shields ☐ Special (Please specify) _____

Housing material: _____ Shaft material: _____

Further description of application and/or special requirements: ☐ Sketch included

_____

_____

_____

(continue on second sheet if necessary)

Innovation. Commitment. Quality.

RBC has been producing bearings in the USA since 1919. In addition to unique custom bearings, RBC offers a full line of standard industrial and aerospace bearings, including:

Spherical Plain Bearings

Radial, angular contact, extended inner ring, high misalignment. **QuadLube®, ImpactTuff®, SpreadLock® Seal, CrossLube®, DuraLube™,** and self-lubricating bearings. Available in inch and metric sizes.

Thin Section Ball Bearings

Standard cross sections to one inch. Sizes to 40 inches. Stainless steel and other materials are available. Seals are available on all sizes and standard cross sections. Super duplex configurations.

Tapered Roller Bearings

Tyson® case-hardened and through-hardened tapered roller bearings. Available in many sizes. Used in Class 8 heavy truck and trailer wheel bearings, gearboxes, and final drive transmissions.

Tapered Roller Thrust Bearings

Case-hardened. Sealed and unsealed for truck, tractor, and construction equipment steer axles, and Class 8 trailer landing gear.

Integrated Assemblies

For robots and other process tool applications. Engineering design assistance. Production volume capacity.

Cam Followers

Standard stud, heavy stud, yoke type, caged roller followers. Patented **RBC Roller®** cylindrical roller cam followers, **HexLube®** universal cam followers, airframe track rollers.

Needle Roller Bearings

Pitchlign® caged heavy duty needle roller bearings, inner rings, **TJ Tandem-Roller®** bearings for long life.

Self-Lubricating Bearings

Radial, thrust, rod ends, spherical bearings, high temperature, high loads. Available in inch and metric sizes. **Fiberglide®** self-lubricating bearings.

Airframe Control Bearings

Ball bearing types, self-lubricating types, needle roller track rollers.

Dowel Pins, Loose Needle Rollers, Shafts

Precision Products dowel pins, loose needle rollers, and shafts.

Commercial Rod Ends

Commercial and industrial, precision, Mil-Spec series, self-lubricating, and aircraft. Sold under the **Heim®, Unibal®,** and **Spherco®** names. Available in inch and metric sizes.

Ball Bearings

Precision ground, semiground, unground. High loads, long life, smooth operation. **Nice®** branded products are offered in caged and full complement configurations.

Specials

RBC manufactures many specialty bearings for the aerospace, oil and energy, semiconductor equipment, packaging, transportation, and other industries.

Authorized RBC Distributor

www.rbcbearings.com
800.390.3300

This document contains a general overview of the products and features described herein. It is solely for informational purposes, does not represent a warranty of the information contained herein, and is not to be construed as an offer to sell or a solicitation to buy. Contact RBC Bearings for detailed information suitable to your specific applications. RBC Bearings reserves the right to modify its products and related product information at any time without prior notice. Some of the products listed herein may be covered by one or more issued and pending U.S. or foreign patents. Contact RBC Bearings for product specific information.

© 2006, 2007, 2008, 2015 RBC Bearings Incorporated. All rights reserved.

02/2020